JB LIGHTING



M15 Profile

DMX Protokoll | DMX Chart

Version 1.03

Software >= 1.0.0

Inhalt / Content

Deutsch

1.0 Menü-Übersicht 03
2.0 Ansteuerungsmöglichkeiten 08
2.1 DMX 08
2.1.1 Übersicht DMX-Modi M15 Profile 08
2.1.2 DMX-Kanalfunktionen M15 Profile 10
2.1.3 Steuerkanal 22
2.1.4 Sparkle Effekt, Sparklegeschwindigkeit 22
2.1.5 Autofokus 22
2.2 Artnet 23
2.3 Streaming ACN 23
2.4 Wireless-DMX 23
2.5 RDM 23
2.5.1 RDM-UID 23
2.5.2 RDM-PIDs 23
2.5.3 Standard RDM-Parameter-IDs 24
2.5.4 Herstellerspezifische RDM-Parameter-IDs 24
2.5.5 RDM-Sensoren-IDs 25
3. JB-Lighting User Network 25

English

4.0 Menu navigation 27
5.0 Control options 32
5.1 DMX 32
5.1.1 Operating modes M15 Profile 32
5.1.2 DMX channel functions M15 Profile 34
5.1.3 Control channel 46
5.1.4 Sparkle effect, sparkle speed 46
5.1.5 Auto focus 47
5.2 Artnet 47
5.3 Streaming ACN 47
5.4 Wireless-DMX 47
5.5 RDM 47
5.5.1 RDM-UID 47
5.5.2 RDM-PIDs 47
5.5.3 Standard RDM parameter IDs 48
5.5.4 Manufacturer specific RDM parameter IDs 48
5.5.5 RDM sensor IDs 49
6. JB-Lighting user network 49

1.0 Menü-Übersicht

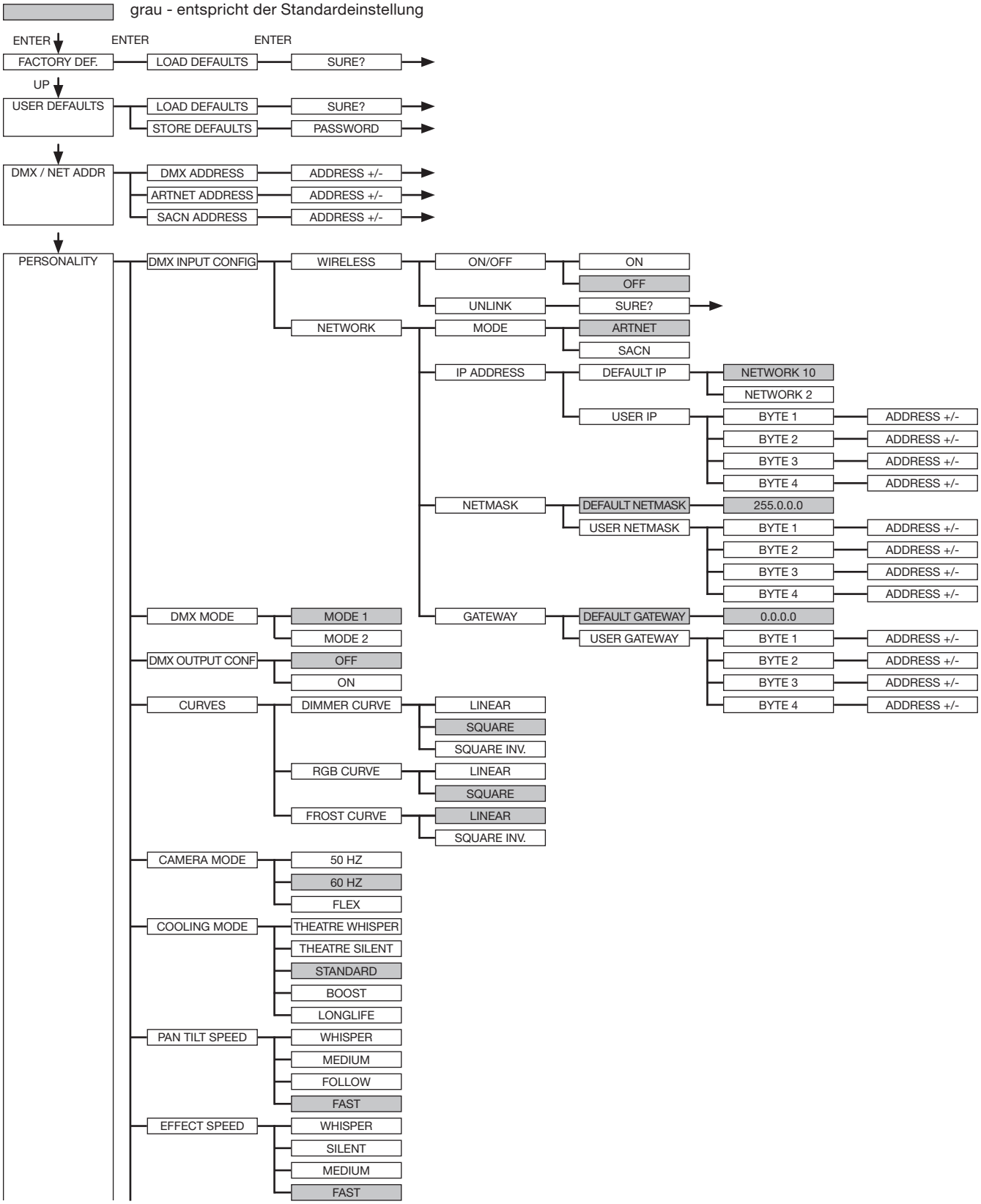

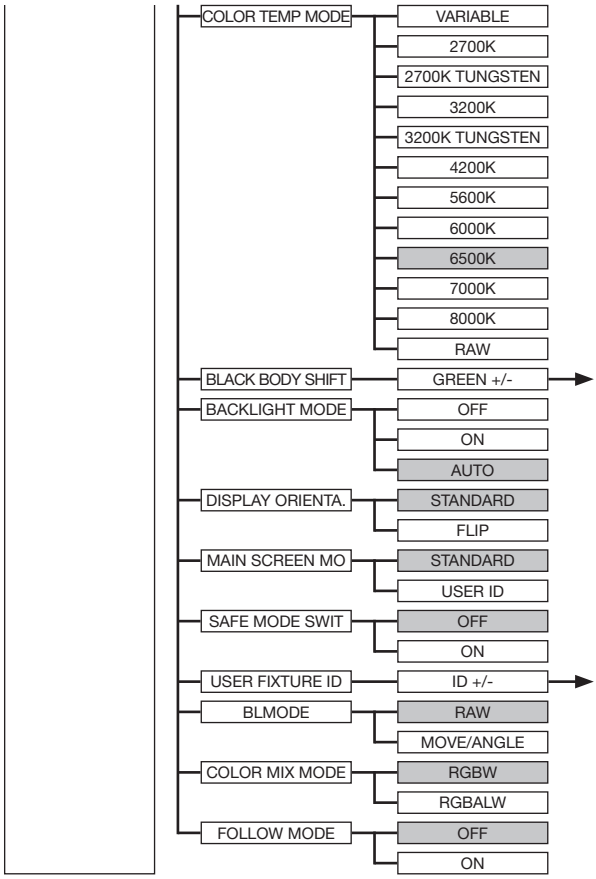
COLOR TEMP MODE
VARIABLE
2700K
2700K TUNGSTEN
3200K
3200K TUNGSTEN
4200K
5600K
6000K
6500K
7000K
8000K
RAW
BLACK BODY SHIFT
GREEN +/-
BACKLIGHT MODE
OFF
ON
AUTO
DISPLAY ORIENTA.
STANDARD
FLIP
MAIN SCREEN MO
STANDARD
USER ID
SAFE MODE SWIT
OFF
ON
USER FIXTURE ID
ID +/-
BLMODE
RAW
MOVE/ANGLE
COLOR MIX MODE
RGBW
RGBALW
FOLLOW MODE
OFF
ON

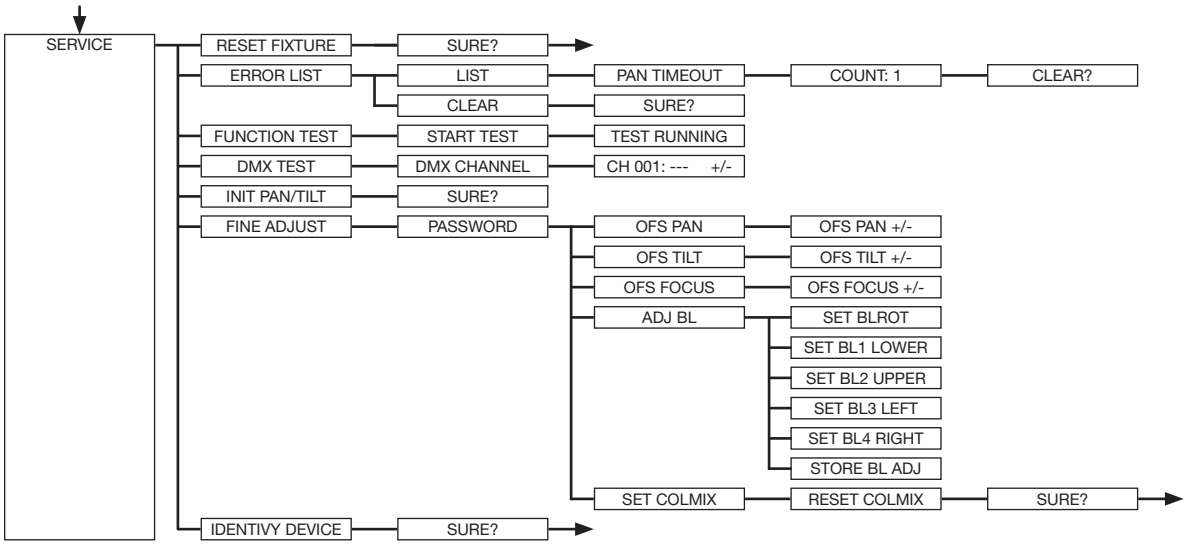
SERVICE
RESET FIXTURE
SURE?
ERROR LIST
LIST
PAN TIMEOUT
COUNT: 1
CLEAR?
CLEAR
SURE?
FUNCTION TEST
START TEST
TEST RUNNING
DMX TEST
DMX CHANNEL
CH 001: --- +/-
INIT PAN/TILT
SURE?
FINE ADJUST
PASSWORD
OFS PAN
OFS PAN +/-
OFS TILT
OFS TILT +/-
OFS FOCUS
OFS FOCUS +/-
ADJ BL
SET BLROT
SET BL1 LOWER
SET BL2 UPPER
SET BL3 LEFT
SET BL4 RIGHT
STORE BL ADJ
SET COLMIX
RESET COLMIX
SURE?
IDENTIVY DEVICE
SURE?

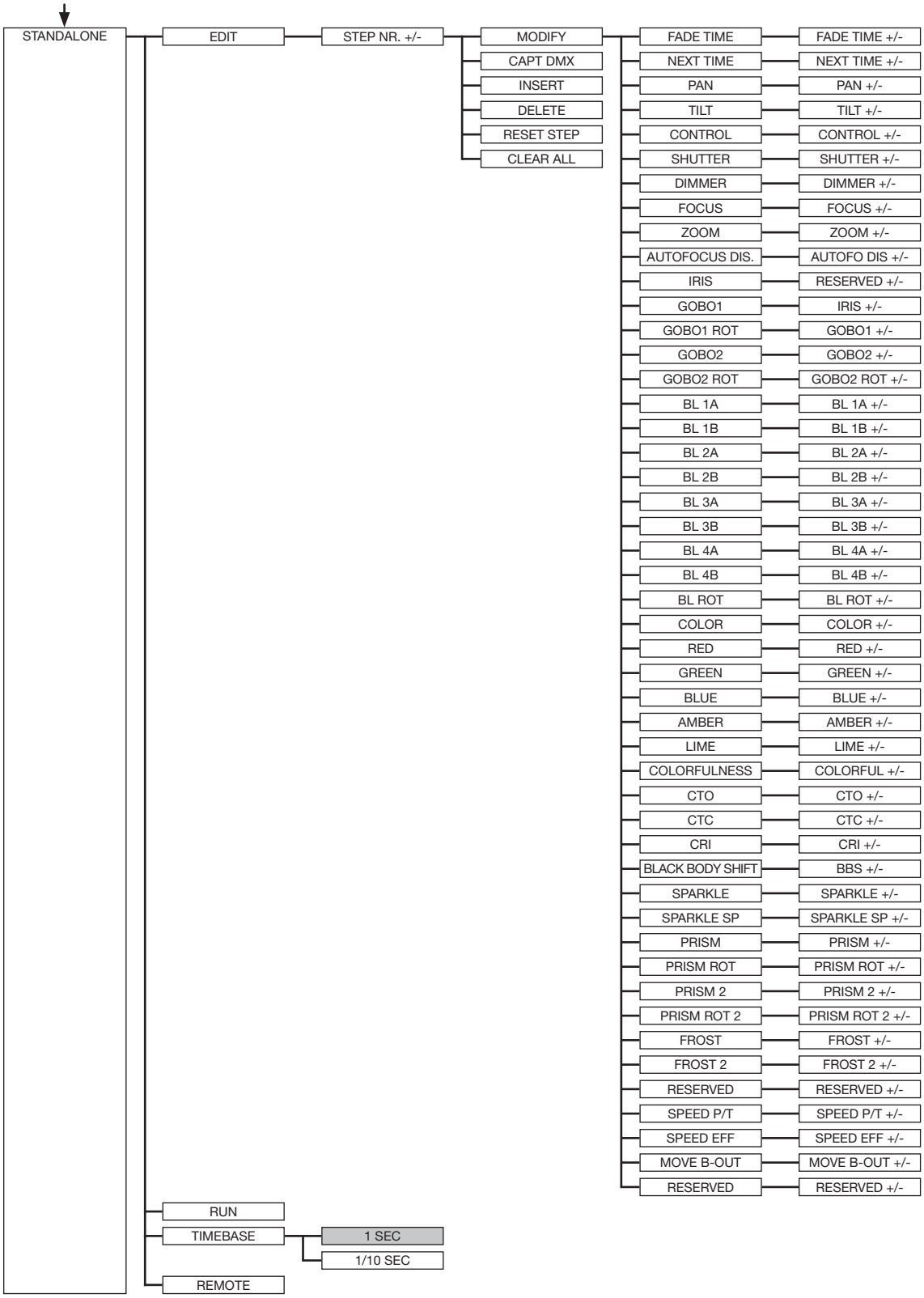
STANDALONE
EDIT
STEP NR. +/-
MODIFY
CAPT DMX
INSERT
DELETE
RESET STEP
CLEAR ALL
FADE TIME
NEXT TIME
PAN
TILT
CONTROL
SHUTTER
DIMMER
FOCUS
ZOOM
AUTOFOCUS DIS.
IRIS
GOBO1
GOBO1 ROT
GOBO2
GOBO2 ROT
BL 1A
BL 1B
BL 2A
BL 2B
BL 3A
BL 3B
BL 4A
BL 4B
BL ROT
COLOR
RED
GREEN
BLUE
AMBER
LIME
COLORFULNESS
CTO
CTC
CRI
BLACK BODY SHIFT
SPARKLE
SPARKLE SP
PRISM
PRISM ROT
PRISM 2
PRISM ROT 2
FROST
FROST 2
RESERVED
SPEED P/T
SPEED EFF
MOVE B-OUT
RESERVED
FADE TIME +/-
NEXT TIME +/-
PAN +/-
TILT +/-
CONTROL +/-
SHUTTER +/-
DIMMER +/-
FOCUS +/-
ZOOM +/-
AUTOFO DIS +/-
RESERVED +/-
IRIS +/-
GOBO1 +/-
GOBO2 +/-
GOBO2 ROT +/-
BL 1A +/-
BL 1B +/-
BL 2A +/-
BL 2B +/-
BL 3A +/-
BL 3B +/-
BL 4A +/-
BL 4B +/-
BL ROT +/-
COLOR +/-
RED +/-
GREEN +/-
BLUE +/-
AMBER +/-
LIME +/-
COLORFUL +/-
CTO +/-
CTC +/-
CRI +/-
BBS +/-
SPARKLE +/-
SPARKLE SP +/-
PRISM +/-
PRISM ROT +/-
PRISM 2 +/-
PRISM ROT 2 +/-
FROST +/-
FROST 2 +/-
RESERVED +/-
SPEED P/T +/-
SPEED EFF +/-
MOVE B-OUT +/-
RESERVED +/-
RUN
TIMEBASE
1 SEC
1/10 SEC
REMOTE

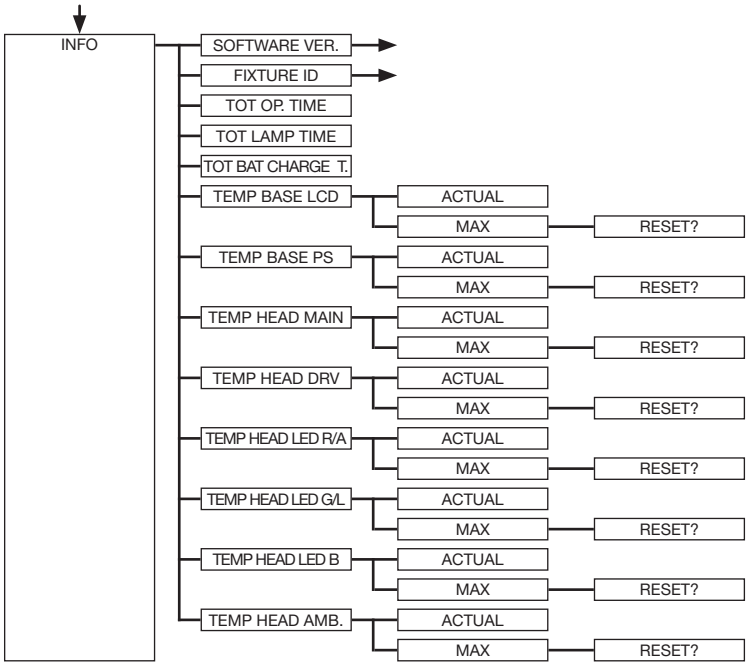
INFO
SOFTWARE VER.
FIXTURE ID
TOT OP. TIME
TOT LAMP TIME
TOT BAT CHARGE T.
TEMP BASE LCD
ACTUAL
MAX
RESET?
TEMP BASE PS
ACTUAL
MAX
RESET?
TEMP HEAD MAIN
ACTUAL
MAX
RESET?
TEMP HEAD DRV
ACTUAL
MAX
RESET?
TEMP HEAD LED R/A
ACTUAL
MAX
RESET?
TEMP HEAD LED G/L
ACTUAL
MAX
RESET?
TEMP HEAD LED B
ACTUAL
MAX
RESET?
TEMP HEAD AMB.
ACTUAL
MAX
RESET?

2.0 Ansteuerungsmöglichkeiten

2.1 DMX

2.1.1 Übersicht DMX-Modi M15 Profile

Der M15 Profile verfügt über 3 unterschiedliche DMX-Modi. Der jeweilige Modus lässt sich im Menüpunkt PERSONALITY, DMX MODE einstellen. Der eingestellte Mode wird im Hauptmenü angezeigt.

	Mode 1(M1)	Mode 2 (M2)	Mode 3 (M3) ab Software 1.0.9
Kanal 1	Pan	Pan	Pan
Kanal 2	Pan fein	Pan fein	Pan fein
Kanal 3	Tilt	Tilt	Tilt
Kanal 4	Tilt fein	Tilt fein	Tilt fein
Kanal 5	Steuerkanal	Steuerkanal	Steuerkanal
Kanal 6	Shutter	Shutter	Shutter
Kanal 7	Dimmer	Dimmer	Dimmer
Kanal 8	Fokus	Dimmer fein	Dimmer fein
Kanal 9	Zoom	Fokus	Fokus
Kanal 10	Autofokus Distanz	Fokus fein	Fokus fein
Kanal 11	Iris	Zoom	Zoom
Kanal 12	Gobo 1	Zoom fein	Zoom fein
Kanal 13	Gobo 1 Rotation	Autofokus Distanz	Autofokus Distanz
Kanal 14	Gobo 2	Iris	Iris
Kanal 15	Gobo 2 Rotation	Iris fein	Iris fein
Kanal 16	Blende 1a / 1 Thrust	Gobo 1	Gobo 1
Kanal 17	Blende 1b / 1 Angle	Gobo 1 Rotation	Gobo 1 Rotation
Kanal 18	Blende 2a / 2 Thrust	Gobo 1 Rotation fein	Gobo 1 Rotation fein
Kanal 19	Blende 2b / 2 Angle	Gobo 2	Gobo 2
Kanal 20	Blende 3a / 3 Thrust	Gobo 2 Rotation	Gobo 2 Rotation
Kanal 21	Blende 3b / 3 Angle	Gobo 2 Rotation fein	Gobo 2 Rotation fein
Kanal 22	Blende 4a / 4 Thrust	Blende 1a	Blende 1a
Kanal 23	Blende 4b / 4 Angle	Blende 1a fein	Blende 1a fein
Kanal 24	Blende-Rotation	Blende 1b	Blende 1b
Kanal 25	virtuelles Farbrad	Blende 1b fein	Blende 1b fein
Kanal 26	Rot	Blende 2a	Blende 2a
Kanal 27	Grün	Blende 2a fein	Blende 2a fein
Kanal 28	Blau	Blende 2b	Blende 2b
Kanal 29	Amber	Blende 2b fein	Blende 2b fein
Kanal 30	Lime	Blende 3a	Blende 2a
Kanal 31	Farbenfülle	Blende 3a fein	Blende 2a fein
Kanal 32	CTO	Blende 3b	Blende 2b
Kanal 33	CTC	Blende 3b fein	Blende 2b fein
Kanal 34	CRI-Auswahl	Blende 4a	Blende 4a
Kanal 35	Black Body Shift (Tint)	Blende 4a fein	Blende 4a fein
Kanal 36	Sparkle	Blende 4b	Blende 4b
Kanal 37	Sparkle Geschwindigkeit	Blende 4b fein	Blende 4b fein
Kanal 38	Prisma 1	Blende-Rotation	Blende-Rotation
Kanal 39	Prisma 1 Rotation	Blende-Rotation fein	Blende-Rotation fein
Kanal 40	Prisma 2	Virtuelles Farbrad	Virtuelles Farbrad
Kanal 41	Prisma 2 Rotation	Rot	Virtuelle Farben 1
Kanal 42	Frost 1	Rot fein	Virtuelle Farben 2

Kanal 43	Frost 2	Grün	Rot
Kanal 44	Reserve	Grün fein	Rot fein
Kanal 45	Pan/Tilt-Geschwindigkeit	Blau	Grün
Kanal 46	Effekt-Geschwindigkeit	Blau fein	Grün fein
Kanal 47	Blackout Move	Amber	Blau
Kanal 48		Amber fein	Blau fein
Kanal 49		Lime	Amber
Kanal 50		Lime fein	Amber fein
Kanal 51		Farbenfülle	Lime
Kanal 52		Farbenfülle fein	Lime fein
Kanal 53		CTO	Farbenfülle
Kanal 54		CTO fein	Farbenfülle fein
Kanal 55		CTC	CTO
Kanal 56		CRI-Auswahl	CTO fein
Kanal 57		Black Body Shift (Tint)	CTC
Kanal 58		Sparkle	CRI-Auswahl
Kanal 59		Sparkle Geschwindigkeit	Virtuell Rot
Kanal 60		Prisma 1	Virtuell Grün
Kanal 61		Prisma 1 Rotation	Virtuell Blau
Kanal 62		Prisma 1 Rotation fein	Virtuell Amber
Kanal 63		Prisma 2	Virtuell Lime
Kanal 64		Prisma 2 Rotation	Crossfade Farben
Kanal 65		Prisma 2 Rotation fein	Black Body Shift (Tint)
Kanal 66		Frost 1	Sparkle
Kanal 67		Frost 2	Sparkle Geschwindigkeit
Kanal 68		Reserve	Prisma 1
Kanal 69		Pan/Tilt-Geschwindigkeit	Prisma 1 Rotation
Kanal 70		Effekt-Geschwindigkeit	Prisma 1 Rotation fein
Kanal 71		Blackout Move	Prisma 2
Kanal 72			Prisma 2 Rotation
Kanal 73			Prisma 2 Rotation fein
Kanal 74			Frost 1
Kanal 75			Frost 2
Kanal 76			Reserve
Kanal 77			Pan/Tilt-Geschwindigkeit
Kanal 78			Effekt-Geschwindigkeit
Kanal 79			Blackout Move

Functions written in light grey are not available in current software!!

2.1.2 DMX-Kanalfunktionen M15 Profile

M1	M2	M3	Funktion	DMX
1	1	1	**Pan** (X) Bewegung 546,74°	000-255
2	2	2	**Pan** (X) fein (16 Bit)	000-255
3	3	3	**Tilt** (Y) Bewegung 281,16°	000-255
4	4	4	**Tilt** (Y) fein (16 Bit)	000-255
5	5	5	**Steuerkanal - Achtung die Funktionen des Steuerkanals können gesperrt werden. Standardmäßig ist der Kanal nicht gesperrt. Die Einstellung PERSONALITY -> SAVE MODE SWITCH beachten!** Um gleichmäßiges Ausdimmen manuell über Fader für alle Lichtmischpulte zu ermöglichen stehen 5 verschiedene Einstellungen für die DMX-Glättung zur Verfügung. Sollte bei manchen DMX-Pulten das DMX-Signal abreißen oder zu wenige Pakete gesendet werden, kann mit diesem Kanal das Ansprechverhalten des Scheinwerfers angepasst werden. Die Einstellung für minimale DMX-Glättung sollte bei den meisten gängigen Pulten funktionieren. Die Werte für DMX-Glättung müssen dauerhaft an den Scheinwerfer gesendet werden. Bei den anderen Werten wie z.B. Cooling Mode, Farbtemperatur usw. müssen die Werte für 2 Sekunden anliegen, dann wird das Gerät dauerhaft umgeschaltet. (entspricht der Umstellung im Menü PERSONALITY) **Einstellung für minimale DMX-Glättung** (Eine gedimmte Shuttersequenz ist möglich) Dimmer Fade out über Fader (schnell - langsam) nicht belegt **Einstellung für minimale/mittlere DMX-Glättung** Dimmer Fade out über Fader (schnell - langsam) nicht belegt **Einstellung für mittlere DMX-Glättung** Dimmer Fade out über Fader (schnell - langsam) **Color Mix Power Limit - Einstellung der Gesamtleistungsaufnahme** 50% 60% 70% 80% 90% Off **Constant Color Mode - Einstellung der Farbtreue** Off 20% 40% 60& 80% Max **Constant Brightness Mode - Einstellung für konstante Helligkeitsregelung** Off 20% 40% 60% 80% Max	 <

			Constant Brightness Limit - Einstellung des Limits für konstante Helligkeitsregelung	
			Off	090-090
			50%	091-091
			60%	092-092
			70%	093-093
			80%	094-094
			90%	095-095
			Einstellung für mittlere/maximale DMX-Glättung	
			Dimmer Fade out über Fader (schnell - langsam)	096-103
			BACKLIGHT MODE - Display-Hintergrundbeleuchtung	
			OFF - die Hintergrundbeleuchtung ist immer aus, bis eine Taste gedrückt wird	104-104
			ON - die Hintergrundbeleuchtung ist immer an	105-105
			AUTO - der Scheinwerfer steuert die Hintergrundbeleuchtung automatisch	106-106
			DISPLAY ORIENTATION - Displayausrichtung	
			STANDARD - das display ist zu lesen wenn der Scheinwerfer steht	107-107
			FLIP - die Displayausrichtung ist um 180° gedreht, hängend lesbar	108-108
			nicht belegt	109-109
			MAIN SCREEN MODE - Ansicht Hauptbildschirm	
			STANDARD - der Hauptbildschirm zeigt die DMX-Adresse, den DMX-Mode und bei aktiviertem Wireless die Feldstärke an.	110-110
			USER FIXTURE ID - der Hauptbildschirm zeigt die frei definierbare Fixture-ID / Scheinwerfernummer an	111-111
			nicht belegt	112-112
			USER FIXTURE ID SET - Scheinwerfernummer setzen	
			SET - hiermit kann die USER ID eingestellt werden. der Scheinwerfer übernimmt den 16Bit Wert von Pan für die USER ID	113-113
			nicht belegt	114-115
			BLACK BODY SHIFT - Einstellung des Grün/Magenta-Abgleichs (+-Grün)	
			BLACK BODY SHIFT - der Scheinwerfer übernimmt den 16Bit Wert von Pan, Werte von -99 bis +99 (DMX-Werte 0 - 65535, 32768 ist kein BLACK BODY SHIFT)	116-116
			nicht belegt	117-127
			Einstellung für maximale DMX-Glättung	
			Dimmer Fade out über Fader (schnell - langsam)	128-135
			DIMMER CURVE - Einstellung der Dimmerkurve	
			LINEAR - lineare Dimmerkurve	136-136
			SQUARE - exponentielle Dimmerkurve	137-137
			SQUARE INVERS - exponentiell inverse Dimmerkurve	138-138
			nicht belegt	139-139
			RGBAL CURVE - Einstellung der RGBAL-Kurve	
			LINEAR - lineare RGB/CMY-Kurve	140-140
			SQUARE - exponentielle RGB/CMY-Kurve	141-141
			nicht belegt	142-142
			FROST CURVE - Einstellung der Frostkurve	
			LINEAR - lineare Frostkurve	143-143
			SQUARE INVERS - exponentiell inverse Frostkurve	144-144
			nicht belegt	145-145
			PAN/TILT SPEED - Pan/Tilt-Geschwindigkeit	
			WHISPER	146-146
			MEDIUM	147-147
			FOLLOW	148-148
			FAST	149-149

			EFFECT SPEED - Effekt-Geschwindigkeit	
			WHISPER	150-150
			SILENT	151-151
			MEDIUM	152-152
			FAST	153-153
			not used	154-155
			BLMODE - Art der Blendenschieberansteuerung	
			RAW	156-156
			MOVE/ANGLE	157-157
			BLROT DIR - Umschaltung der Richtung der Blendenschieberrotation	
			NORMAL	158-158
			INVERS	159-159
			COOLING MODE - Einstellung der Lüfterlautstärke und der Helligkeit	
			Die Umschaltung erfolgt mit Dimmer/Shutter zu (DMX 000) dann nach 2 Sekunden außer die Schalter "SAFE MODE SWITCH" im PERSONALITY-Menü sthet auf OFF, dann kann die Umschaltung direkt erfolgen ohne dass Dimmer und Shutter zu sein müssen.	
			THEATRE WHISPER	160-160
			THEATRE SILENT	161-161
			STANDARD	162-162
			BOOST	163-163
			LONGLIFE	164-164
			nicht belegt	165-169
			COLOR TEMPERATURE - Einstellung der Farbtemperatur des Scheinwerfers	
			Farbtemperatur 2000K (CTO 2000K - 12000K)	170-170
			Farbtemperatur 2700K (CTO 2700K - 2700K)	171-171
			Farbtemperatur 2700K halogenes ausdimmen	172-172
			Farbtemperatur 3200K (CTO 3200K - 2700K)	173-173
			Farbtemperatur 3200K halogenes ausdimmen	174-174
			Farbtemperatur 4200K (CTO 4200K - 2700K)	175-175
			Farbtemperatur 5600K (CTO 5600K - 2700K)	176-176
			Farbtemperatur 6000K (CTO 6000K - 2700K)	177-177
			Farbtemperatur 6500K (CTO 6500K - 2700K)	178-178
			Farbtemperatur 7000K (CTO 7000K - 2700K)	179-179
			Farbtemperatur 8000K (CTO 8000K - 2700K)	180-180
			RAW-Mode	181-181
			nicht belegt	182-184
			COLOR MIX MODE - Art der Farbmischung	
			RGBW	185-185
			RGBALW	186-186
			nicht belegt	187-189
			FAN MODE - Einstellung der Grundlautstärke im gewählten COOLING MODE	
			Min	190-190
			20%	191-191
			40%	192-192
			60%	193-193
			80%	194-194
			Max	195-195

Functions written in light grey are not available in current software!!

			FOLLOW MODE - Verfolgermodus Ein-/Ausschalten	
			OFF - Verfolgermodus ausschalten	196-196
			ON - Verfolgermodus einschalten	197-197
			SAVE VIRTUAL USER FILTER - Speichern der virtuellen Benutzer Filter	
			Virtuellen Benutzerfilter 1 speichern	198-198
			Virtuellen Benutzerfilter 2 speichern	199-199
			Virtuellen Benutzerfilter 3 speichern	200-200
			Virtuellen Benutzerfilter 4 speichern	201-201
			Virtuellen Benutzerfilter 5 speichern	202-202
			Virtuellen Benutzerfilter 6 speichern	203-203
			Virtuellen Benutzerfilter 7 speichern	204-204
			Virtuellen Benutzerfilter 8 speichern	205-205
			Virtuellen Benutzerfilter 9 speichern	206-206
			Virtuellen Benutzerfilter 10 speichern	207-207
			CAMERA MODE - Einstellung der LED-Wiederhofrequenz	
			50Hz - 100Hz	208-215
			60Hz - 120Hz	216-223
			FLEX - 600Hz	224-227
			nicht belegt	228-239
			RESET - ein Grundreset des Scheinwerfers wird durchgeführt	
			Reset	240-247
			nicht belegt	248-255
6	6	6	**Shutter**	
			Shutter zu	000-015
			Shutter auf	016-095
			Shutter pulsierend öffnen >20Hz (schnell - langsam)	096-110
			Shutter auf	111-111
			Fadeout-Effekt nach Einflashen (langsam - schnell)	112-125
			Shutter auf	126-126
			Shutter zu	127-126
			Shutter pulsierend öffnen <20Hz (schnell - langsam)	128-142
			Shutter auf	143-143
			Shutter pulsierend schließen (schnell - langsam)	144-158
			Shutter zu	159-159
			Shutter fade, 0% (schnell - langsam)	160-174
			Shutter auf	175-175
			Shutter fade, 100% (schnell - langsam)	176-190
			Shutter zu	191-191
			Shutter Zufall 100% (schnell - langsam)	192-206
			Shutter auf	207-207
			Shutter Zufall 0% (schnell - langsam)	208-222
			Shutter zu	223-223
			Shutter Zufall fade 0% (schnell - langsam)	224-238
			Shutter auf	239-239
			Shutter Zufall fade 100% (schnell - langsam)	240-254
			Shutter auf	255-255
7	7	7	**Dimmer** 0 - 100%	000-255
	8	8	**Dimmer fein** (16Bit)	000-255
8	9	9	**Fokus** 0-100%	000-255
	10	10	**Fokus fein** (16 Bit)	000-255

Functions written in light grey are not available in current software!!

9	11	11	**Zoom** 0 -100% (nah 7° - weit 56°)	000-255
	12	12	**Zoom fein** (16 Bit)	000-255
10	13	13	**Autofokus Distanz** Autofokus aus Autofokus 0 m - 25,5 m (0 = aus, DMX / 10 = Entfernung	 000-001 002-255
11	14	14	**Iris** 0-100% (offen -> zu)	000-255
	15	15	**Iris** fein (16Bit)	000-255
12	16	16	**Goborad 1** Gobo 0 (offen) 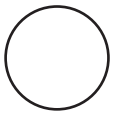 Gobo 1 (Worms)  Gobo 2 (River Stones)  Gobo 3 (Bamboo inverted)  Gobo 4 (Tiger)  Gobo 5 (Scorpion)  Gobo 6 (Dots) 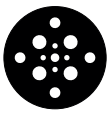 Gobo 0 Shake (schnell - langsam) Gobo 1 Shake (schnell - langsam) Gobo 2 Shake (schnell - langsam) Gobo 3 Shake (schnell - langsam) Gobo 4 Shake (schnell - langsam) Gobo 5 Shake (schnell - langsam) Gobo 6 Shake (schnell - langsam) Goboradrotation (schnell - langsam) Goboradrotation (langsam - schnell)	 000-007 008-015 016-023 024-031 032-039 040-047 048-127 128-135 136-143 144-151 152-159 160-167 168-175 176-191 192-223 224-255
13	17	17	**Gobopositionierung / -rotation 1** Gobopositionierung 0°-540° Goborotation rechts (schnell - langsam) Goborotation Stop Goborotation links (langsam - schnell)	 000-191 192-222 223-224 225-255
	18	18	**Gobopositionierung / -rotation 1 fein** (16 Bit)	000-255

14	19	19	**Goborad 2 - rotierende Gobos** Gobo 0 (open) 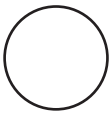 Gobo 1 (Bush)  Gobo 2 (Curl)  Gobo 3 (Stones) 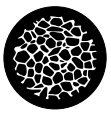 Gobo 4 (Rays)  Gobo 5 (Irregular Dots) 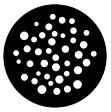 Gobo 6 (Waterdrop)  Gobo 0 Shake (schnell - langsam) Gobo 1 Shake (schnell - langsam) Gobo 2 Shake (schnell - langsam) Gobo 3 Shake (schnell - langsam) Gobo 4 Shake (schnell - langsam) Gobo 5 Shake (schnell - langsam) Gobo 6 Shake (schnell - langsam) Goboradrotation (schnell - langsam) Goboradrotation (langsam - schnell)	000-007 008-015 016-023 024-031 032-039 040-047 048-127 128-135 136-143 144-151 152-159 160-167 168-175 176-191 192-223 224-255
15	20	20	**Gobopositionierung / -rotation 2** Gobopositionierung 0°-540° Goborotation rechts (schnell - langsam) Goborotation Stop Goborotation links (langsam - schnell)	 000-191 192-222 223-224 225-255
	21	21	**Gobopositionierung / -rotation 2 fein** (16 Bit)	000-255
16	22	22	**Blende 1a / 1 Thrust** 0-100%	000-255
	23	23	**Blende 1a / 1 Thrust fein** (16 Bit)	000-255
17	24	24	**Blende 1b / 1 Angle** 0-100%	000-255
	25	25	**Blende 1b / 1 Angle fein** (16 Bit)	000-255
18	26	26	**Blende 2a / 2 Thrust** 0-100%	000-255

	27	27	**Blende 2a / 2 Thrust fein** (16 Bit)	000-255
19	28	28	**Blende 2b / 2 Angle** 0-100%	000-255
	29	29	**Blende 2b / 2 Angle fein** (16 Bit)	000-255
20	30	30	**Blende 3a / 3 Thrust** 0-100%	000-255
	31	31	**Blende 3a / 3 Thrust fein** (16 Bit)	000-255
21	32	32	**Blende 3b / 3 Angle** 0-100%	000-255
	33	33	**Blende 3b / 3 Angle fein** (16 Bit)	000-255
22	34	34	**Blende 4a / 4 Thrust** 0-100%	000-255
	35	35	**Blende 4a / 4 Thrust fein** (16 Bit)	000-255
23	36	36	**Blende 4b / 4 Angle** 0-100%	000-255
	37	37	**Blende 4b / 4 Angle fein** (16 Bit)	000-255
24	38	38	**Blendenschieber-Rotation** -65° / +65°	000-255
	39	39	**Blendenschieber-Rotation fein** (16 Bit)	000-255
25	40	40	**Farbrademulation**	
			Inaktiv, Farbmischung nur über RGBAL (RGB)	000-000
			Weiß (entsprechend Farbtemperatureinstellung Scheinwerfer)	001-003
			Weiß / Rot	004-007
			Rot	008-011
			Rot / Gelb	012-015
			Gelb	016-019
			Gelb / Magenta	020-023
			Magenta	024-027
			Magenta / Grün	028-031
			Grün	032-035
			Grün / Orange	036-039
			Orange	040-043
			Orange / Blau	044-047
			Blau	048-051
			Blau / Türkis	052-055
			Türkis	056-059
			Türkis / Weiß	060-063
			Weiß 2700 Kelvin	064-064
			Weiß 2700 Kelvin, halogenes ausdimmen	065-065
			Weiß 3200 Kelvin	066-066
			Weiß 3200 Kelvin, halogenes ausdimmen	067-067
			Weiß 4200 Kelvin	068-068
			Weiß 5600 Kelvin	069-069
			Weiß 6000 Kelvin	070-070
			Weiß 6500 Kelvin	071-071
			Weiß 7000 Kelvin	072-072
			Weiß 8000 Kelvin	073-191
			Farbwechseleffekt (schnell - langsam)	192-223
			Farbwechseleffekt (schnell - langsam)	224-255

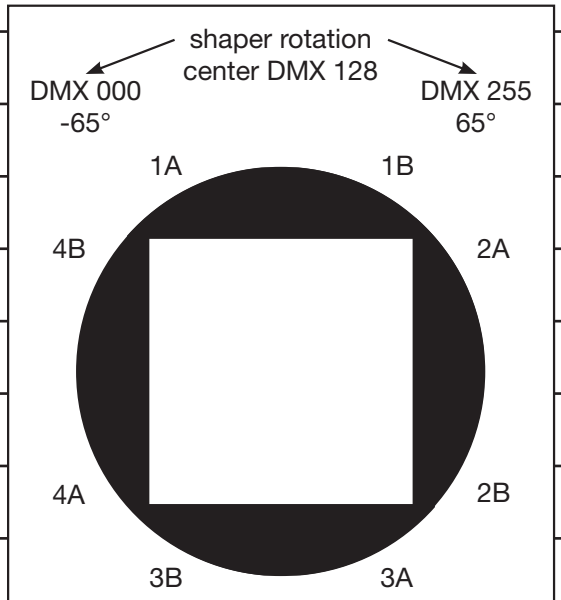

fixture standing with display to the front
Pan: center DMX 128
Tilt: lens looking backwards DMX 200

		41	**Virtuelle Farben 1**	
			Offen	000-000
			Filter 4 – Medium Bastard Amber	001-002
			Filter 10 – Medium Yellow	003-004
			Filter 19 – Fire	005-006
			Filter 26 – Bright Red	007-008
			Filter 58 – Lavender	009-010
			Filter 68 – Sky Blue	011-012
			Filter 71 – Tokyo Blue	013-014
			Filter 79 – Just Blue	015-016
			Filter 88 – Lime Green	017-018
			Filter 90 – Dark Yellow Green	019-020
			Filter 100 – Spring Yellow	021-022
			Filter 101 – Yellow	023-024
			Filter 102 – Light Amber	025-026
			Filter 103 – Straw	027-028
			Filter 104 – Deep Amber	029-030
			Filter 105 – Orange	031-032
			Filter 106 – Primary Red	033-034
			Filter 111 – Dark Pink	035-036
			Filter 115 – Peacock Blue	037-038
			Filter 116 – Medium Blue-Green	039-040
			Filter 117 – Steel Blue	041-042
			Filter 118 – Light Blue	043-044
			Filter 119 – Dark Blue	045-046
			Filter 120 – Deep Blue	047-048
			Filter 121 – Filter Green	049-050
			Filter 128 – Bright Pink	051-052
			Filter 131 – Marine Blue	053-054
			Filter 132 – Medium Blue	055-056
			Filter 134 – Golden Amber	057-058
			Filter 135 – Deep Golden Amber	059-060
			Filter 136 – Pale Lavender	061-062
			Filter 137 – Special Lavender	063-064
			Filter 138 – Pale Green	065-066
			Filter 139 – Primary Green	067-068
			Filter 141 – Bright Blue	069-070
			Filter 147 – Apricot	071-072
			Filter 148 – Bright Rose	073-074
			Filter 152 – Pale Gold	075-076
			Filter 154 – Pale Rose	077-078
			Filter 157 – Pink	079-080
			Filter 158 – Deep Orange	081-082
			Filter 162 – Bastard Amber	083-084
			Filter 164 – Flame Red	085-086
			Filter 165 – Daylight Blue	087-088
			Filter 169 – Lilac Tint	089-090
			Filter 170 – Deep Lavender	091-092
			Filter 172 – Lagoon Blue	093-094
			Filter 179 – Chrome Orange	095-096
			Filter 180 – Dark Lavender	097-098
			Filter 181 – Congo Blue	099-100
			Filter 197 – Alice Blue	101-102
			Filter 201 – Full C.T. Blue	103-104
			Filter 202 – Half C.T. Blue	105-106
			Filter 203 – Quarter C.T. Blue	107-108
			Filter 204 – Full C.T. Orange	109-110
			Filter 205 – Half C.T. Orange	111-112
			Filter 206 – Quarter C.T. Orange	113-114

Functions written in light grey are not available in current software!!

			Filter 247 – Full Minus Green	115-116
			Filter 248 – Half Minus Green	117-118
			Filter 281 – Three Quarter C.T. Blue	119-120
			Filter 285 – Three Quarter C.T. Orange	121-122
			Filter 352 – Glacier Blue	123-124
			Filter 353 – Lighter Blue	125-126
			Filter 715 – Cabana Blue	127-128
			Filter 778 – Millennium Gold	129-130
			Filter 793 – Vanity Fai	131-200
			Benutzerfilter 1	201-201
			Benutzerfilter 2	202-202
			Benutzerfilter 3	203-203
			Benutzerfilter 4	204-204
			Benutzerfilter 5	205-205
			Benutzerfilter 6	206-206
			Benutzerfilter 7	207-207
			Benutzerfilter 8	208-208
			Benutzerfilter 9	209-209
			Benutzerfilter 10	210-210
			Nicht belegt	211-255
		42	**Virtuelle Farben 2**	
			Offen	000-000
			Filter 4 – Medium Bastard Amber	001-002
			Filter 10 – Medium Yellow	003-004
			Filter 19 – Fire	005-006
			Filter 26 – Bright Red	007-008
			Filter 58 – Lavender	009-010
			Filter 68 – Sky Blue	011-012
			Filter 71 – Tokyo Blue	013-014
			Filter 79 – Just Blue	015-016
			Filter 88 – Lime Green	017-018
			Filter 90 – Dark Yellow Green	019-020
			Filter 100 – Spring Yellow	021-022
			Filter 101 – Yellow	023-024
			Filter 102 – Light Amber	025-026
			Filter 103 – Straw	027-028
			Filter 104 – Deep Amber	029-030
			Filter 105 – Orange	031-032
			Filter 106 – Primary Red	033-034
			Filter 111 – Dark Pink	035-036
			Filter 115 – Peacock Blue	037-038
			Filter 116 – Medium Blue-Green	039-040
			Filter 117 – Steel Blue	041-042
			Filter 118 – Light Blue	043-044
			Filter 119 – Dark Blue	045-046
			Filter 120 – Deep Blue	047-048
			Filter 121 – Filter Green	049-050
			Filter 128 – Bright Pink	051-052
			Filter 131 – Marine Blue	053-054
			Filter 132 – Medium Blue	055-056
			Filter 134 – Golden Amber	057-058
			Filter 135 – Deep Golden Amber	059-060
			Filter 136 – Pale Lavender	061-062
			Filter 137 – Special Lavender	063-064
			Filter 138 – Pale Green	065-066
			Filter 139 – Primary Green	067-068
			Filter 141 – Bright Blue	069-070
			Filter 147 – Apricot	071-072

Functions written in light grey are not available in current software!!

			Filter 148 – Bright Rose Filter 152 – Pale Gold Filter 154 – Pale Rose Filter 157 – Pink Filter 158 – Deep Orange Filter 162 – Bastard Amber Filter 164 – Flame Red Filter 165 – Daylight Blue Filter 169 – Lilac Tint Filter 170 – Deep Lavender Filter 172 – Lagoon Blue Filter 179 – Chrome Orange Filter 180 – Dark Lavender Filter 181 – Congo Blue Filter 197 – Alice Blue Filter 201 – Full C.T. Blue Filter 202 – Half C.T. Blue Filter 203 – Quarter C.T. Blue Filter 204 – Full C.T. Orange Filter 205 – Half C.T. Orange Filter 206 – Quarter C.T. Orange Filter 247 – Full Minus Green Filter 248 – Half Minus Green Filter 281 – Three Quarter C.T. Blue Filter 285 – Three Quarter C.T. Orange Filter 352 – Glacier Blue Filter 353 – Lighter Blue Filter 715 – Cabana Blue Filter 778 – Millennium Gold Filter 793 – Vanity Fai Benutzerfilter 1 Benutzerfilter 2 Benutzerfilter 3 Benutzerfilter 4 Benutzerfilter 5 Benutzerfilter 6 Benutzerfilter 7 Benutzerfilter 8 Benutzerfilter 9 Benutzerfilter 10 Nicht belegt	073-074 075-076 077-078 079-080 081-082 083-084 085-086 087-088 089-090 091-092 093-094 095-096 097-098 099-100 101-102 103-104 105-106 107-108 109-110 111-112 113-114 115-116 117-118 119-120 121-122 123-124 125-126 127-128 129-130 131-200 201-201 202-202 203-203 204-204 205-205 206-206 207-207 208-208 209-209 210-210 211-255
26	41	43	**Rot** (8 Bit) 0-100%	000-255
	42	44	**Rot fein** (16 Bit)	000-255
27	43	45	**Grün** (8 Bit) 0-100%	000-255
	44	46	**Grün fein** (16 Bit)	000-255
28	45	47	**Blau** (8 Bit) 0-100%	000-255
	46	48	**Blau fein** (16 Bit)	000-255
29	47	49	**Amber** (8 Bit) 0-100%	000-255
	48	50	**Amber fein** (16 Bit)	000-255

Functions written in light grey are not available in current software!!

30	49	51	**Lime** (8 Bit) 0-100%	000-255
	50	52	**Lime fein** (16 Bit)	000-255
31	51	53	**Farbenfülle** (8 Bit) 0-100%	000-255
	52	54	**Farbenfülle fein** (16 Bit)	000-255
32	53	55	**CTO** (8 Bit) 0-100%	000-255
	54	56	**CTO fein** (16 Bit)	000-255
33	55	57	**CTC** 2000 K - 13000 K / Standardwerte: HP DMX068 / HC DMX058 / WW DMX032 Off 2000 K 2000 K - 13000K in 100K-Schritten DMX 20 = 2000K, DMX 21=2100K 13000K	 000-000 001-020 021-130 131-255
34	56	58	**CRI-Auswahl** CRI 70-95	 000-255
		59	**Virtuell Rot** Minus Rot Neutral Plus Rot	 000-127 128-128 129-255
		60	**Virtuell Grün** Minus Grün Neutral Plus Grün	 000-127 128-128 129-255
		61	**Virtuell Blau** Minus Blau Neutral Plus Blau	 000-127 128-128 129-255
		62	**Virtuell Amber** Minus Amber Neutral Plus Amber	 000-127 128-128 129-255
		63	**Virtuell Lime** Minus Lime Neutral Plus Lime	 000-127 128-128 129-255
		64	**Crossfade Farben** Off RGBAL-Farbmischung Crossfade RGBAL-Farbmischung nach Virtuelle Farben 1 Virtuelle Farben 1 Crossfade Virtuelle Farben 1 nach Virtuelle Farben 2 Virtuelle Farben 2	 000-000 001-001 002-126 127-128 129-254 255-255

Functions written in light grey are not available in current software!!

35	57	65	**Black Body Shift (Tint)** Off Minus Grün (-100% -> -1%) Neutralweiß Plus Grün (+1% -> +100%)	 000-000 001-127 128-128 129-255
36	58	66	**Sparkle - Glittereffekt** Sparkle Effekt inaktiv Sparkle Effekt Intensität (minimum - maximum)	 000-000 001-255
37	59	67	**Sparkle Geschwindigkeit** Sparkle Effekt gefadet (langsam -> schnell) Sparkle Effekt geschaltet (langsam -> schnell) Wiederholung der Fade- und Schaltblöcke	 000-031 032-063 064-255
38	60	68	**Prisma 1** Offen Prisma 1 (5fach linear)	 000-007 008-255
39	61	69	**Prisma 1 Positionierung / Rotation** Prisma Positionierung (0°-540°) Prisma Rotation rechts (schnell -> langsam) Prisma Rotation stop Prisma Rotation links (langsam -> schnell)	 000-191 192-222 223-224 225-255
	62	70	**Prisma 1 Positionierung / Rotation fein** (16 Bit)	000-255
40	63	71	**Prisma 2** Offen Prisma 2 (3fach kreisförmig)	 000-007 008-255
41	64	72	**Prisma 2 Positionierung / Rotation** Prisma Positionierung (0°-540°) Prisma Rotation rechts (schnell -> langsam) Prisma Rotation stop Prisma Rotation links (langsam -> schnell)	 000-191 192-222 223-224 225-255
	65	73	**Prisma 2 Positionierung / Rotation fein** (16 Bit)	000-255
42	66	74	**Frost 1 "light Frost"** Frost 0-100%	 000-255
43	67	75	**Frost 2 "heavy Frost"** Frost 0-100%	 000-255
44	68	76	**Reserve** nicht belegt	 000-255
45	69	77	**Pan/Tilt Geschwindigkeit** Bewegung in Echtzeit Bewegung zeitverzögert (schnell - langsam)	 000-003 004-255
46	70	78	**Effektgeschwindigkeit** Effekte in Echtzeit Effekte zeitverzögert (schnell - langsam)	 000-003 004-255

47	71	79	**Blackout Move**	
			Nicht belegt	000-095
			Blackout bei Pan/Tilt	096-127
			Blackout bei Gobo, Farbe, Prisma, Farbmix, Iris, Frost	128-159
			Blackout bei Gobo, Farbe, Prisma, Farbmix, Iris, Frost, Zoom, Fokus	160-191
			Blackout bei Gobo, Farbe, Prisma, Farbmix, Iris, Frost, Pan/Tilt	192-223
			Blackout bei Gobo, Farbe, Prisma, Farbmix, Iris, Frost, Zoom, Fokus, Pan/Tilt	224-255

2.1.3 Steuerkanal

Über den Steuerkanal können verschieden Funktionen des Scheinwerfers permanent umgeschaltet werden. Folgende Funktionen können über den Steuerkanal umgeschaltet werden.

Ansprechverhalten des Scheinwerfers beim Ausdimmen über Fader
COLOR MIX POWER LIMIT - Einstellung der Gesamtleistungsaufnahme
CONSTANT COLOR MODE - Einstellung der Farbtreue
CONSTANT BRIGHTNESS MODE - Einstellung für konstante Helligkeit
CONSTANT BRIGHTNESS LIMIT - Einstellung des Limits für konstante Heligkeitsregelung
BACKLIGHT MODE - Display Hintergrundbeleuchtung
DISPLAY ORIENTATION - Displayausrichtung
MAIN SCREEN MODE - Ansicht Hauptbildschirm
USER FIXTURE ID SET - Scheinwerfernummer setzen
BLACK BODY SHIFT - Anpassung +- Grün
DIMMER CURVE - Einstellung der Dimmerkurve
RGBAL CURVE - Einstellung der RGBAL Kurve
FROST CURVE - Einstellung der Frostkurve
PAN/TILT SPEED - Pan/Tilt-Geschwindigkeit
EFFECT SPEED - Effekt-Geschwindigkeit
COOLING MODE - Einstellung der Lüfterlautstärke und der Helligkeit
COLOR TEMP MODE - Einstellung der Farbtemperatur
BL MODE - Art der Blendenschieberansteuerung
COLOR MIX MODE - Einstellung der Farbmischung RGB - RGBAL
FAN MODE - Einstellung der Grundlautstärke im gewählten COOLING MODE
CAMERA MODE - Einstellung der LED-Wiederholfrequenz
RESET - Ein Grundreset des Scheinwerfers wird durchgeführt
Die Details hierzu siehe DMX-Kanalfunktionen für den M15 Profile auf der Seite 10.

2.1.4 Sparkle Effekt, Sparklegeschwindigkeit

Über diesen Kanal können in Verbindung mit dem Fokus Animationseffekte erzeugt werden. Je nach Intensität wird die Abbildung mehr oder weniger zum pulsieren angeregt. Dieser Effekt kann gefadet oder geschaltet werden.

2.1.5 Autofokus

Zum Aktivieren der Autofokusfunktion den Kanal Autofokus-Distanz auf etwa 50 % stellen. Danach für die Feinjustage des Systems am besten Goborad 2 verwenden und entsprechend den Fokus auf 125 (32000) einstellen: Anschließend über Autofokus-Distanz die Entfernung des Scheinwerfers durch scharf stellen des Scheinwerfers einstellen. Als Richtwert kann der DMX-Wert geteilt durch 10 für die Entfernung (DMX 100 / 10 Entfernung = 10m) angenommen werden. Jetzt kann der Scheinwerfer über den Zoom mit Autofokus betrieben werden. Anhand der folgenden Tabelle können nun die Fokuswerte für die einzelnen Effekte vorgewählt werden und über Zoom mit Autofokus gezoomt werden.

Functions written in light grey are not available in current software!!

	Gobo1	Gobo2	Open	Blenden	Iris
Fokus 8Bit	95	145	185	195	215
Fokus 16Bit	24320	37120	47360	49920	55040

2.2 Artnet

Der Scheinwerfer kann über Artnet - ArtNET 4 angesteuert werden. Hierzu über den Menüpunkt DMX / NET ADDR -> ARTNET ADDRESS die Artnetadresse einstellen und zusätzlich über den Menüpunkt PERSONALITY -> DMX INPUT CONFIG -> NETWORK -> MODE -> ARTNET auswählen. Zusätzlich noch die IP-Adresse des Scheinwerfers über PERSONALITY -> DMX INPUT CONFIG -> NETWORK -> IP ADDRESS definieren.

2.3 Streaming ACN

Der Scheinwerfer kann über sACN - Streaming ACN angesteuert werden. Hierzu über den Menüpunkt DMX / NET ADDR -> SACN ADDRESS die sACN-Adresse einstellen und zusätzlich über den Menüpunkt PERSONALITY -> DMX INPUT CONFIG -> NETWORK -> MODE -> SACN auswählen. Zusätzlich noch die IP-Adresse des Scheinwerfers über PERSONALITY -> DMX INPUT CONFIG -> NETWORK -> IP ADDRESS definieren.

2.4 Wireless-DMX

Der M15 Profile ist mit einem Lumen-Radio CRMX-Empfänger für Wireless DMX ausgestattet. Der Empfänger kann sowohl DMX als auch RDM verarbeiten. Sollte eine Kabel und Wirelessverbindung am M15 Profile anliegen hat die Kabelverbindung Vorrang! Das empfangene Signal kann über den DMX-Anschluß ausgegeben werden. Hierzu im Menü PERSONALITY die Einstellung DMX OUTPUT CONFIG auf ON stellen, nach Bestätigung mit ENTER gibt der Scheinwerfer das komplette über Wireless-DMX empfangene Universum aus.

2.5 RDM

Der M15 Profile kann über RDM (Remote Device Management) gemäß ESTA American National Standard E1.20-2006 kommunizieren. RDM ist ein bidirektionales Kommunikationsprotokoll für den Einsatz in DMX512-Steuerungssystemen. Es ist der offene Standard für die Konfiguration und Statusüberwachung von DMX-512-Geräten. Das RDM-Protokoll ermöglicht das Einfügen von Datenpaketen in einen DMX-512-Datenstrom, ohne dass bestehende Nicht-RDM-Geräte beeinträchtigt werden. Es ermöglicht einer Konsole oder einem dedizierten RDM-Controller, Befehle an bestimmte Geräte zu senden und Nachrichten zu empfangen. Der M15 Profile kann RDM über Artnet 4 und DMX senden und empfangen. Ebenfalls ist der Scheinwerfer dafür ausgelegt RDM über sACN zu senden und über Artnet zu empfangen. Die RDM-Funktionalität ist abhängig vom eingesetzten Lichtsteuerpult, hierzu muss ebenfalls die Bedienungsanleitung des jeweiligen Pultherstellers beachtet werden.

2.5.1 RDM-UID

Jeder M15 Profile hat eine werksseitig festgelegte RDM-UID (eindeutige Identifikationsnummer), die ihn in RDM-Systemen adressierbar und identifizierbar macht.

2.5.2 RDM-PIDs

Der M15 Profile unterstützt die gemäß ESTA erforderlichen RDM-PIDs (Parameter-IDs) sowie herstellerspezifische PIDs.

2.5.3 Standard RDM-Parameter-IDs

RDM-Parameter-ID	GET Befehl	SET Befehl	DISCO-VERY	Anmerkungen
RDM-Identifikation				
DISC_UNIQUE_BRANCH			✔	dient der Scheinwerferidentifikation
DISC_MUTE			✔	dient der Scheinwerferidentifikation
DISC_UN_MUTE			✔	dient der Scheinwerferidentifikation
RDM-Statusermittlung				
QUEUED_MESSAGE	✔			
STATUS_MESSAGES	✔			
STATUS_ID_DESCRIPTION	✔			
CLEAR_STATUS_ID		✔		
RDM-Information				
SUPPORTED_PARAMETERS	✔			
RDM-Konfiguration				
DEVICE_MODEL_DESCRIPTION	✔			
MANUFACTURER_LABEL	✔			
FACTORY_DEFAULTS		✔		
SOFTWARE_VERSION_LABEL	✔			
DMX_PERSONALITY		✔		
DMX_PERSONALITY_DESCRIPTION	✔			
DMX_START_ADDRESS		✔		
SENSOR_DEFINITION	✔			
DEVICE_HOURS	✔			
LAMP_HOURS	✔			
IDENTIFY_DEVICE		✔		
RESET_DEVICE		✔		
PERFORM_SELFTEST		✔		
SELFTEST_DESCRIPTION	✔			

2.5.4 Herstellerspezifische RDM-Parameter-IDs

RDM-Parameter-ID	GET Befehl	SET Befehl	DISCO-VERY	Anmerkungen
RDM-Konfiguration				
Battery Charge Hours	✔			
Error Number	✔			
Error	✔			
Select Next Error		✔		
Remove Error		✔		
Remove New Error Flag		✔		
User Defaults		✔		
User Fixture ID		✔		
Fixture Lock On/Off	✔	✔		
Dimmer Curve	✔	✔		
RGBYA Curve	✔	✔		
Frost Curve	✔	✔		
Camera Mode	✔	✔		

Cooling Mode	✔	✔		
Pan Tilt Speed	✔	✔		
Effect Speed	✔	✔		
Backlight Mode	✔	✔		
Disp Orientation	✔	✔		
Main Screen Mode	✔	✔		
Safe Mode Switch	✔	✔		
Color Mix Power Limit	✔	✔		
Color Temperature Mode	✔	✔		
Constant Brightnes Limit	✔	✔		
Constant Brightness Mode	✔	✔		
Constant Color Mode	✔	✔		
Fan Mode	✔	✔		
Black Body Shift	✔	✔		
Color Mix Mode	✔	✔		
Blade Mode	✔	✔		

2.5.5 RDM-Sensoren-IDs

RDM-Sensor-ID	GET Befehl	SET Befehl	DISCO-VERY	Anmerkungen
RDM-Sensoren				
Temp Sens Base LCD	✔	✔		
Temp Sens Base PS	✔	✔		
Temp Sens Head PCB	✔	✔		
Temp Sens Head Drv	✔	✔		
Temp Sens Head LED	✔	✔		
Temp Sens Head Air	✔	✔		

3. JB-Lighting User Network

Du möchtest deine JB-Lighting Produkte vermieten oder zusätzlich welche anmieten?
Dann melde dich bei unserem User-Network an.
Werde Teil unserer JB Community!

Andere Mitglieder filtern einfach nach Ort oder PLZ, Entfernung sowie benötigtem JB-Produkt und können so deine angebotenen Movingheads mieten – los gehts!

Hier gehts zum User-Network:
https://www.jb-lighting.de/JBUserNetwork?utm_source=handbuch&utm_medium=print&utm_campaign=qr_code_handbuch

English

4.0 Menu navigation

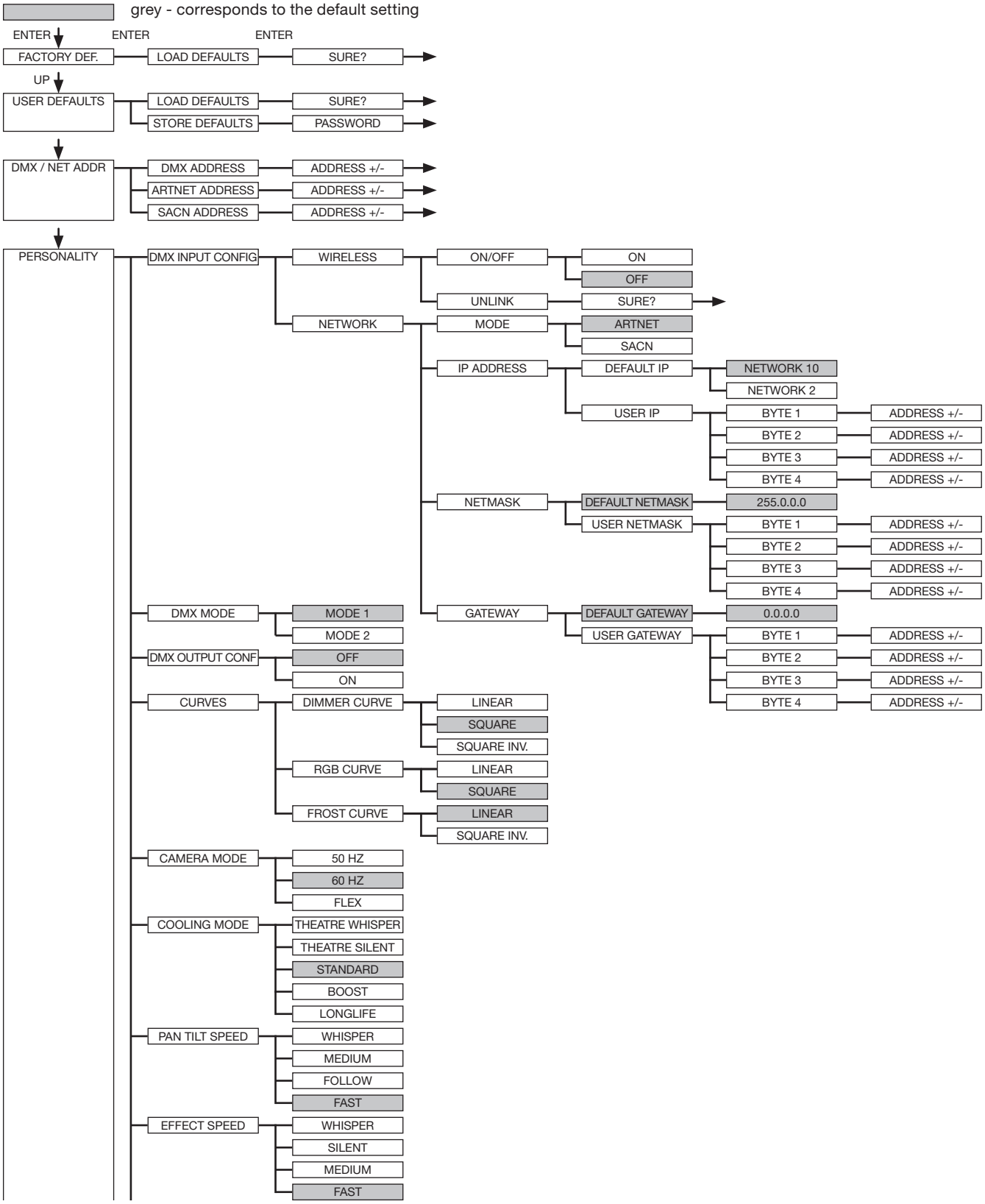

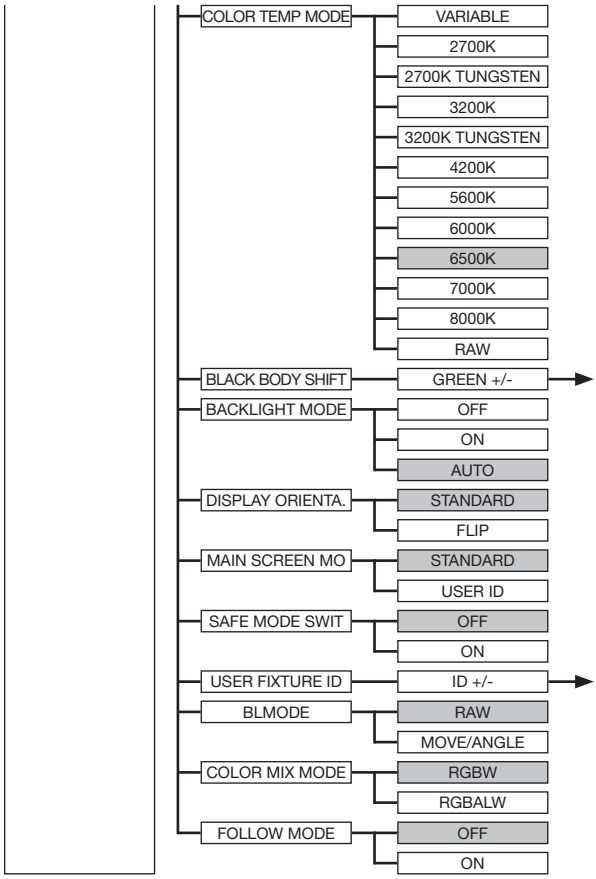
COLOR TEMP MODE
VARIABLE
2700K
2700K TUNGSTEN
3200K
3200K TUNGSTEN
4200K
5600K
6000K
6500K
7000K
8000K
RAW
BLACK BODY SHIFT
GREEN +/-
BACKLIGHT MODE
OFF
ON
AUTO
DISPLAY ORIENTA.
STANDARD
FLIP
MAIN SCREEN MO
STANDARD
USER ID
SAFE MODE SWIT
OFF
ON
USER FIXTURE ID
ID +/-
BLMODE
RAW
MOVE/ANGLE
COLOR MIX MODE
RGBW
RGBALW
FOLLOW MODE
OFF
ON

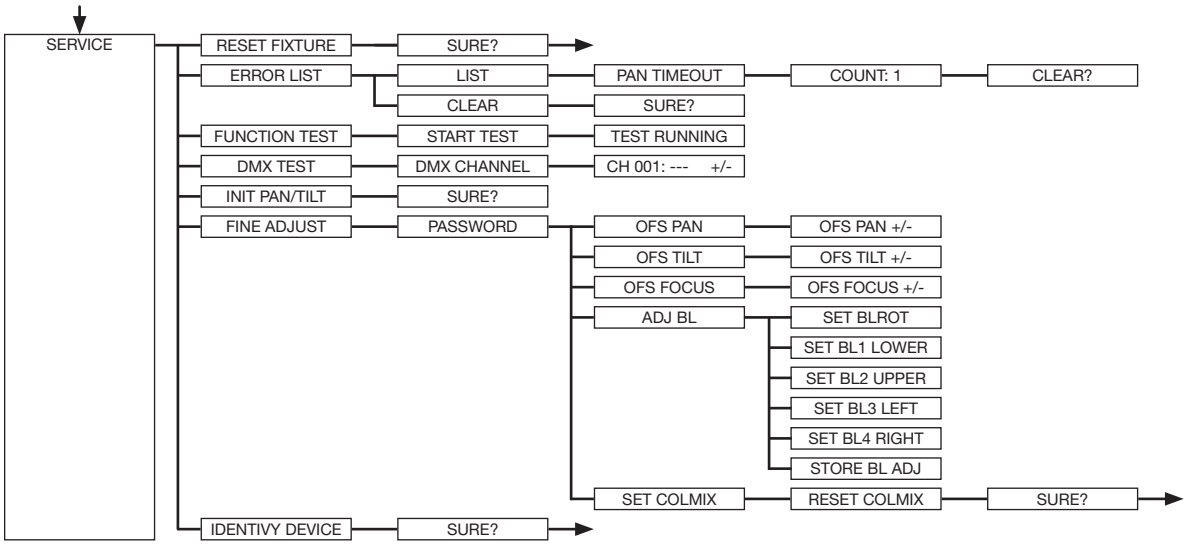
SERVICE
RESET FIXTURE
SURE?
ERROR LIST
LIST
PAN TIMEOUT
COUNT: 1
CLEAR?
CLEAR
SURE?
FUNCTION TEST
START TEST
TEST RUNNING
DMX TEST
DMX CHANNEL
CH 001: --- +/-
INIT PAN/TILT
SURE?
FINE ADJUST
PASSWORD
OFS PAN
OFS PAN +/-
OFS TILT
OFS TILT +/-
OFS FOCUS
OFS FOCUS +/-
ADJ BL
SET BLROT
SET BL1 LOWER
SET BL2 UPPER
SET BL3 LEFT
SET BL4 RIGHT
STORE BL ADJ
SET COLMIX
RESET COLMIX
SURE?
IDENTIVY DEVICE
SURE?

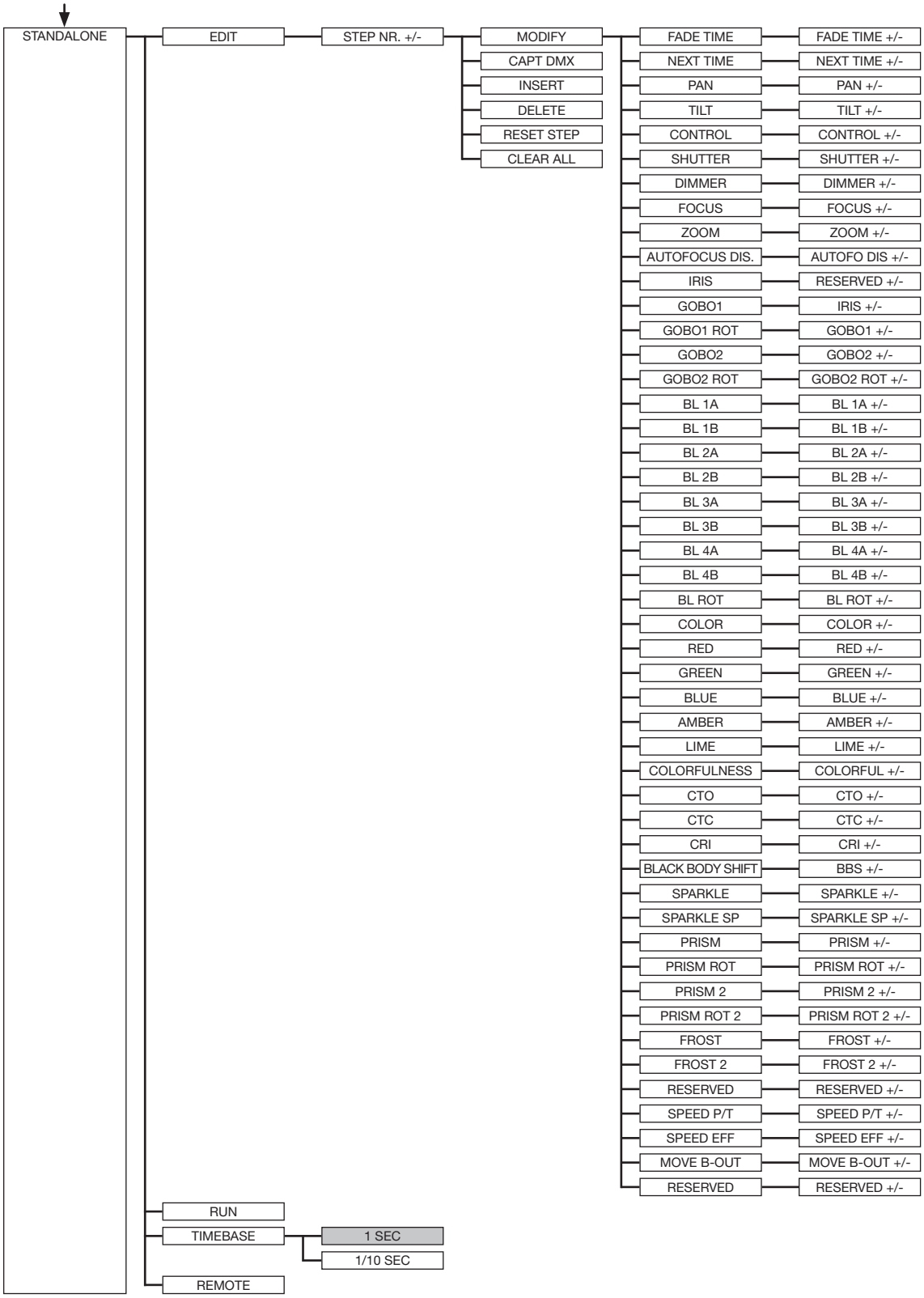
STANDALONE
EDIT
STEP NR. +/-
MODIFY
CAPT DMX
INSERT
DELETE
RESET STEP
CLEAR ALL
FADE TIME
NEXT TIME
PAN
TILT
CONTROL
SHUTTER
DIMMER
FOCUS
ZOOM
AUTOFOCUS DIS.
IRIS
GOBO1
GOBO1 ROT
GOBO2
GOBO2 ROT
BL 1A
BL 1B
BL 2A
BL 2B
BL 3A
BL 3B
BL 4A
BL 4B
BL ROT
COLOR
RED
GREEN
BLUE
AMBER
LIME
COLORFULNESS
CTO
CTC
CRI
BLACK BODY SHIFT
SPARKLE
SPARKLE SP
PRISM
PRISM ROT
PRISM 2
PRISM ROT 2
FROST
FROST 2
RESERVED
SPEED P/T
SPEED EFF
MOVE B-OUT
RESERVED
FADE TIME +/-
NEXT TIME +/-
PAN +/-
TILT +/-
CONTROL +/-
SHUTTER +/-
DIMMER +/-
FOCUS +/-
ZOOM +/-
AUTOFO DIS +/-
RESERVED +/-
IRIS +/-
GOBO1 +/-
GOBO2 +/-
GOBO2 ROT +/-
BL 1A +/-
BL 1B +/-
BL 2A +/-
BL 2B +/-
BL 3A +/-
BL 3B +/-
BL 4A +/-
BL 4B +/-
BL ROT +/-
COLOR +/-
RED +/-
GREEN +/-
BLUE +/-
AMBER +/-
LIME +/-
COLORFUL +/-
CTO +/-
CTC +/-
CRI +/-
BBS +/-
SPARKLE +/-
SPARKLE SP +/-
PRISM +/-
PRISM ROT +/-
PRISM 2 +/-
PRISM ROT 2 +/-
FROST +/-
FROST 2 +/-
RESERVED +/-
SPEED P/T +/-
SPEED EFF +/-
MOVE B-OUT +/-
RESERVED +/-
RUN
TIMEBASE
1 SEC
1/10 SEC
REMOTE

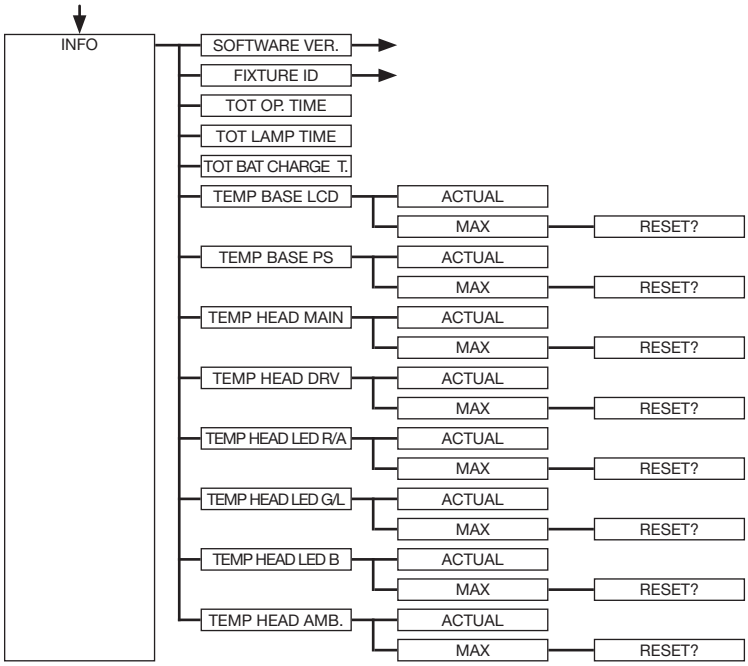
INFO
SOFTWARE VER.
FIXTURE ID
TOT OP. TIME
TOT LAMP TIME
TOT BAT CHARGE T.
TEMP BASE LCD
ACTUAL
MAX
RESET?
TEMP BASE PS
ACTUAL
MAX
RESET?
TEMP HEAD MAIN
ACTUAL
MAX
RESET?
TEMP HEAD DRV
ACTUAL
MAX
RESET?
TEMP HEAD LED R/A
ACTUAL
MAX
RESET?
TEMP HEAD LED G/L
ACTUAL
MAX
RESET?
TEMP HEAD LED B
ACTUAL
MAX
RESET?
TEMP HEAD AMB.
ACTUAL
MAX
RESET?

5.0 Control options

5.1 DMX

5.1.1 Operating modes M15 Profile

The M15 Profile has 3 different DMX modes. The respective mode can be set in the PERSONALITY, DMX MODE menu item. The set mode is displayed in the main menu.

	Mode 1(M1)	Mode 2 (M2)	Mode 3 (M3) from Software 1.0.9
Channel 1	Pan	Pan	Pan
Channel 2	Pan fine	Pan fine	Pan fine
Channel 3	Tilt	Tilt	Tilt
Channel 4	Tilt fine	Tilt fine	Tilt fine
Channel 5	Control channel	Control channel	Control channel
Channel 6	Shutter	Shutter	Shutter
Channel 7	Dimmer	Dimmer	Dimmer
Channel 8	Focus	Fine dimmer	Fine dimmer
Channel 9	Zoom	Focus	Focus
Channel 10	Autofocus distance	Fine focus	Fine focus
Channel 11	Iris	Zoom	Zoom
Channel 12	Gobo 1	Fine zoom	Fine zoom
Channel 13	Gobo 1 rotation	Autofocus distance	Autofocus distance
Channel 14	Gobo 2	Iris	Iris
Channel 15	Gobo 2 rotation	Fine iris	Fine iris
Channel 16	Aperture 1a	Gobo 1	Gobo 1
Channel 17	Aperture 1b	Gobo 1 rotation	Gobo 1 rotation
Channel 18	Aperture 3a	Gobo 1 rotation fine	Gobo 1 rotation fine
Channel 19	Aperture 3b	Gobo 2	Gobo 2
Channel 20	Aperture 2a	Gobo 2 rotation	Gobo 2 rotation
Channel 21	Aperture 2b	Gobo 2 rotation fine	Gobo 2 rotation fine
Channel 22	Aperture 4a	Aperture 1a / 1 Thrust	Aperture 1a / 1 Thrust
Channel 23	Aperture 4b	Aperture 1a / 1 Thrust fine	Aperture 1a / 1 Thrust fine
Channel 24	Aperture rotation	Aperture 1b / 1 Angle	Aperture 1b / 1 Angle
Channel 25	Color	Aperture 1b / 1 Angle fine	Aperture 1b / 1 Angle fine
Channel 26	Red	Aperture 2a / 2 Thrust	Aperture 2a / 2 Thrust
Channel 27	Green	Aperture 2a / 2 Thrust fine	Aperture 2a / 2 Thrust fine
Channel 28	Blue	Aperture 2b / 2 Angle	Aperture 2b / 2 Angle
Channel 29	Amber	Aperture 2b / 2 Angle fine	Aperture 2b / 2 Angle fine
Channel 30	Lime	Aperture 3a / 3 Thrust	Aperture 3a / 3 Thrust
Channel 31	Colorfulness	Aperture 3a / 3 Thrust fine	Aperture 3a / 3 Thrust fine
Channel 32	CTO	Aperture 3b / 3 Angle	Aperture 3b / 3 Angle
Channel 33	CTC	Aperture 3b / 3 Angle fine	Aperture 3b / 3 Angle fine
Channel 34	CRI	Aperture 4a / 4 Thrust	Aperture 4a / 4 Thrust
Channel 35	Black body shift	Aperture 4a / 4 Thrust fine	Aperture 4a / 4 Thrust fine
Channel 36	Sparkle	Aperture 4b / 4 Angle	Aperture 4b / 4 Angle
Channel 37	Sparkle speed	Aperture 4b / 4 Angle fine	Aperture 4b / 4 Angle fine
Channel 38	Prism 1	Aperture rotation	Aperture rotation
Channel 39	Prism 1 rotation	Aperture rotation fine	Aperture rotation fine
Channel 40	Prism 2	Colour wheel	Colour wheel
Channel 41	Prism 2 rotation	Red	Virtual colors 1
Channel 42	Frost 1	Red fine	Virtual colors 2

Channel 43	Frost 2	Green	Red
Channel 44	Reserved	Green fine	Red fine
Channel 45	Pan/tilt speed	Blue	Green
Channel 46	Effect speed	Blue fine	Green fine
Channel 47	Blackout Move	Amber	Blue
Channel 48		Amber fine	Blue fine
Channel 49		Lime	Amber
Channel 50		Lime fine	Amber fine
Channel 51		Colorfulness	Lime
Channel 52		Colorfulness fine	Lime fine
Channel 53		CTO	Colorfulness
Channel 54		CTO fine	Colorfulness fine
Channel 55		CTC	CTO
Channel 56		CRI	CTO fine
Channel 57		Black body shift (tint)	CTC
Channel 58		Sparkle	CRI
Channel 59		Sparkle speed	Virtual red
Channel 60		Prism 1	Virtual green
Channel 61		Prism 1 rotation	Virtual blue
Channel 62		Prism 1 fine rotation	Virtual amber
Channel 63		Prism 2	Virtual lime
Channel 64		Prism 2 rotation	Crossfade
Channel 65		Prism 2 fine rotation	Black body shift (tint)
Channel 66		Frost 1	Sparkle
Channel 67		Frost 2	Sparkle speed
Channel 68		Reserved	Prism 1
Channel 69		Pan/tilt speed	Prism 1 rotation
Channel 70		Effect speed	Prism 1 fine rotation
Channel 71		Blackout Move	Prism 2
Channel 72			Prism 2 rotation
Channel 73			Prism 2 fine rotation
Channel 74			Frost 1
Channel 75			Frost 2
Channel 76			Reserved
Channel 77			Pan/tilt speed
Channel 78			Effect speed
Channel 79			Blackout Move

Functions written in light grey are not available in current software!!

5.1.2 DMX channel functions M15 Profile

M1	M2	M3	Function	DMX
1	1	1	**Pan** (X) movement 546,74°	000-255
2	2	2	**Pan** (X) fine (16 Bit)	000-255
3	3	3	**Tilt** (Y) movement 281.16°	000-255
4	4	4	**Tilt** (Y) fine (16 Bit)	000-255
5	5	5	**Control channel - Attention: The control channel functions are not locked by default. Note the PERSONALITY -> SAVE MODE SWITCH setting!** To enable uniform dimming manually via faders for all light mixing consoles, 5 different settings for the DMX smoothing are available. If the DMX signal is interrupted or too few packets are sent on some DMX consoles, the response of the fixture can be adjusted with this channel. The Minimum DMX Smoothing setting should work on most popular consoles. The values for DMX smoothing must be permanently applied. For the other values, such as cooling mode, color temperature, zoom modes, camera mode, reset, the values must be applied for 2 seconds, then the device will be permanently switched (Same setting as in the PERSONALITY menu). **Setting for minimal DMX smoothing** (A dimmed shutter sequence is possible) Dimmer fade out via fader (fast - slow) not used **Setting for minimum / medium DMX smoothing** Dimmer fade out via fader (fast - slow) not used **Setting for medium DMX smoothing** Dimmer fade out via fader (fast - slow) **Color Mix Power Limit - Sets the total power consumption** 50% 60% 70% 80% 90% Off **Constant Color Mode - Adjust color fidelity** Off 20% 40% 60& 80% Max **Constant Brightness Mode - setting for constant brightness control** Off 20% 40% 60% 80% Max	 000-007 008-031 032-039 040-063 064-071 072-072 073-073 074-074 075-075 076-076 077-077 078-078 079-079 080-080 081-081 082-082 083-083 084-084 085-085 086-086 087-087 088-088 089-089

Functions written in light grey are not available in current software!!

			Constant Brightness Limit - Sets the limit for constant brightness control	
			off	090-090
			50%	091-091
			60%	092-092
			70%	093-093
			80%	094-094
			90%	095-095
			Setting for medium / maximum DMX smoothing	
			Dimmer fade out via fader (fast - slow)	096-103
			BACKLIGHT MODE - Display backlight configuration	
			AUTO - the fixture controls the backlight automatically	104-104
			ON - the backlight is always on	105-105
			OFF - the backlight is always off until a key is pressed	106-106
			DISPLAY ORIENTATION - display flip or not	
			STANDARD - the display can be read when the headlamp is on a surface	107-107
			FLIP - the display orientation is rotated by 180 °, hanging readable	108-108
			not used	109-109
			MAIN SCREEN MODE - view of the main screen	
			STANDARD - the main screen displays the DMX address, the DMX mode, and when wireless is enabled, the field strength.	110-110
			USER FIXTURE ID - the main screen displays the user definable fixture ID / headlight number	111-111
			not used	112-112
			USER FIXTURE ID SET - set of fixture number	
			SET - the USER ID can be set. The headlamp takes the 16-bit value of Pan for the USER ID	113-113
			not used	114-115
			BLACK BODY SHIFT - set of green shift	
			BLACK BODY SHIFT - The headlamp takes the 16-bit value of Pan for the BLACK BODY SHIFT. Values from -99 to +99 (DMX values 0 to 65535, 32768 is no shift)	116-116
			not used	117-127
			Setting for maximum DMX smoothing	
			Dimmer fade out via fader (fast - slow)	128-135
			DIMMER CURVE - selection of dimmer curve	
			LINEAR - linear dimmer curve	136-136
			SQUARE - exponential dimmer curve	137-137
			SQUARE INVERSE - exponential inverse dimmer curve	138-138
			not used	139-139
			RGBYA CURVE - selection of RGBYA curve	
			LINEAR - linear RGBYA curve	140-140
			SQUARE - Exponential RGBYA curve	141-141
			not used	142-142
			FROST CURVE - selection of frost curve	
			LINEAR - linear frost curve	143-143
			SQUARE INVERSE - Exponential inverse frost curve	144-144
			not used	145-145
			PAN/TILT SPEED - selection of PAN/TILT speed	
			WHISPER	146-146
			MEDIUM	147-147
			FOLLOW	148-148
			FAST	149-149

			EFFECT SPEED - selection of effect speed	
			WHISPER	150-150
			SILENT	151-151
			MEDIUM	152-152
			FAST	153-153
			not used	154-155
			BLMODE - type of shutter control	
			RAW	156-156
			MOVE/ANGLE	157-157
			BLROT DIR - switching the direction of the shutter rotation	
			NORMAL	158-158
			INVERS	159-159
			COOLING MODE - Adjust the fan volume and brightness	
			This takes place with dimmer / shutter set to closed (DMX 000) then after 2 seconds the fixture will switch this option, except the switch "SAFE MODE SWITCH" in the PERSONALITY menu is set to OFF, then the changeover can take place directly without dimmer and shutter having to be closed.	
			THEATRE WHISPER	160-160
			THEATRE SILENT	161-161
			STANDARD	162-162
			BOOST	163-163
			LONGLIFE	164-164
			not used	165-169
			COLOR TEMPERATURE - adjustment of the color temperature of the fixture	
			Color temperature 2000K (CTO 2000K - 20000K)	170-170
			Color temperature 2700K (CTO 2700K - 2700K	171-171
			Color temperature 2700K tungsten dim out	172-172
			Color temperature 3200K (CTO 3200K - 2700K)	173-173
			Color temperature 3200K tungsten dim out	174-174
			Color temperature 4200K (CTO 4200K - 2700K)	175-175
			Color temperature 5600K (CTO 5600K - 2700K)	176-176
			Color temperature 6000K (CTO 6000K - 2700K)	177-177
			Color temperature 6500K (CTO 6500K - 2700K)	178-178
			Color temperature 7000K (CTO 7000K - 2700K)	179-179
			Color temperature 8000K (CTO 8000K - 2700K)	180-180
			RAW mode	181-181
			not used	182-184
			COLOR MIX MODE - selection of color mixing mode RGBW or RGBALW	
			RGBW	185-185
			RGBALW	186-186
			not used	186-189
			FAN MODE - Sets the basic volume in the selected COOLING MODE	
			min	190-190
			20%	191-191
			40%	192-192
			60%	193-193
			80%	194-194
			Max	195-195

Functions written in light grey are not available in current software!!

			FOLLOW MODE - Switch follow mode on/off	
			OFF - Switch follow mode off	196-196
			ON - Switch follow mode on	197-197
			SAVE VIRTUAL USER FILTER - saving the virtual user filters	
			saving virtual user filter 1	198-198
			saving virtual user filter 2	199-199
			saving virtual user filter 3	200-200
			saving virtual user filter 4	201-201
			saving virtual user filter 5	202-202
			saving virtual user filter 6	203-203
			saving virtual user filter 7	204-204
			saving virtual user filter 8	205-205
			saving virtual user filter 9	206-206
			saving virtual user filter 10	207-207
			CAMERA MODE - Setting the LED refresh rate	
			50Hz - 100Hz	
			60Hz - 120Hz	208-215
			FLEX - 600Hz	216-223
			not used	224-227
				228-239
			RESET - a basic reset of the fixture is carried out	
			Reset	
			not used	240-247
				248-255
6	6	6	**Shutter**	
			Shutter closed	000-015
			Shutter open	016-095
			Open pulsing shutter >20Hz (rapid - slow)	096-110
			Shutter open	111-111
			Fadeout effect after flashing (slow - rapid)	112-125
			Shutter open	126-126
			Shutter closed	127-126
			Open pulsing shutter <20Hz (rapid - slow)	128-142
			Shutter open	143-143
			Close pulsing shutter >20Hz (rapid - slow)	144-158
			Shutter closed	159-159
			Shutter fade, 0% (rapid - slow)	160-174
			Shutter open	175-175
			Shutter fade, 100% (rapid - slow)	176-190
			Shutter closed	191-191
			Random shutter 100% (rapid - slow)	192-206
			Shutter open	207-207
			Random shutter 0% (rapid - slow)	208-222
			Shutter closed	223-223
			Random shutter fade, 0% (rapid- slow)	224-238
			Shutter open	239-239
			Random shutter fade, 100% (rapid- slow)	240-254
			Shutter open	255-255
7	7	7	**Dimmer** 0 - 100%	000-255
	8	8	**Dimmer fine** (16Bit)	
8	9	9	**Focus** 0-100%	000-255
	10	10	**Focus fine** (16 Bit)	000-255

Functions written in light grey are not available in current software!!

9	11	11	**Zoom** 0 -100% (near 6.5° - far 54°)	000-255
	12	12	**Zoom fine** (16 Bit)	000-255
10	13	13	**Auto focus distance** Auto focus off Auto focus 0 m - 25,5 m (0=off, DMX / 10 = distance)	 000-001 002-255
11	14	14	**Iris** 0-100% (open -> closed)	000-255
	15	15	**Fine iris** (16Bit)	000-255
12	16	16	**Gobo wheel 1** Gobo 0 Gobo 1 (Worms) Gobo 2 (River Stones) Gobo 3 (Bamboo inverted) Gobo 4 (Tiger) Gobo 5 (Scorpion) Gobo 6 (Dots) Gobo 0 shake (fast - slow) Gobo 1 shake (fast - slow) Gobo 2 shake (fast - slow) Gobo 3 shake (fast - slow) Gobo 4 shake (fast - slow) Gobo 5 shake (fast - slow) Gobo 6 shake (fast - slow) Gobo wheel rotation, right (fast - slow) Gobo wheel rotation, left (slow - fast)	 000-007 008-015 016-023 024-031 032-039 040-047 048-127 128-135 136-143 144-151 152-159 160-167 168-175 176-191 192-223 224-255
13	17	17	**Gobo positioning/rotation 1** Gobo positioning 0° - 540° Gobo rotation, right (rapid - slow) Stop gobo rotation Gobo rotation, left (slow - rapid)	 000-191 192-222 223-224 225-255
	18	18	**Gobo positioning/rotation 1 fine** (16 Bit)	000-255



14	19	19	**Gobo wheel 2 - rotating gobos**	
			Gobo 0 (open) 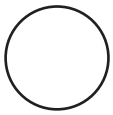	000-007
			Gobo 1 (Bush) 	008-015
			Gobo 2 (Curl) 	016-023
			Gobo 3 (Stones) 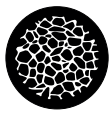	024-031
			Gobo 4 (Rays) 	032-039
			Gobo 5 (Irregular Dots) 	040-047
			Gobo 6 (Waterdrop) 	048-127
			Gobo 0 (open)	128-135
			Gobo 1 shake (fast - slow)	136-143
			Gobo 2 shake (fast - slow)	144-151
			Gobo 3 shake (fast - slow)	152-159
			Gobo 4 shake (fast - slow)	160-167
			Gobo 5 shake (fast - slow)	168-175
			Gobo 6 shake (fast - slow)	176-191
			Gobo wheel rotation (fast - slow)	192-223
			Gobo wheel rotation (slow - fast)	224-255
15	20	20	**Gobo positioning/rotation 2**	
			Gobo positioning 0° - 540°	000-191
			Gobo rotation, right (rapid - slow)	192-222
			Stop gobo rotation	223-224
			Gobo rotation, left (slow - rapid)	225-255
	21	21	**Fine gobo positioning/rotation 2** (16 Bit)	000-255
16	22	22	**Aperture 1a / 1 Thrust** 0-100%	000-255
	23	23	**Aperture 1a / 1 Thrust fine** (16 Bit)	000-255
17	24	24	**Aperture 1b / 1 Angle** 0-100%	000-255
	25	25	**Aperture 1b / 1 Angle fine** (16 Bit)	000-255
18	26	26	**Aperture 2a / 2 Thrust** 0-100%	000-255

	27	27	**Aperture 2a / 2 Thrust fine** (16 Bit)	000-255
19	28	28	**Aperture 2b / 2 Angle** 0-100%	000-255
	29	29	**Aperture 2b / 2 Angle fine** (16 Bit)	000-255
20	30	30	**Aperture 3a / 3 Thrust** 0-100%	000-255
	31	31	**Aperture 3a / 3 Thrust fine** (16 Bit)	000-255
21	32	32	**Aperture 3b / 3 Angle** 0-100%	000-255
	33	33	**Aperture 3b / 3 Angle fine** (16 Bit)	000-255
22	34	34	**Aperture 4a / 4 Thrust** 0-100%	000-255
	35	35	**Aperture 4a / 4 Thrust fine** (16 Bit)	000-255
23	36	36	**Aperture 4b / 4 Angle** 0-100%	000-255
	27	27	**Aperture 4b / 4 Angle fine** (16 Bit)	000-255
24	38	38	**Aperture rotation** +65° / -65°	000-255
	39	39	**Aperture rotation fine** (16 Bit)	000-255
25	40	40	**Color wheel emulation**	
			Inactive, color mixing only via RGBAY	000-000
			White (according to color temperature setting headlights)	001-003
			White / red	004-007
			Red	008-011
			Red / yellow	012-015
			Yellow	016-019
			Yellow / magenta	020-023
			Magenta	024-027
			Magenta / green	028-031
			Green	032-035
			Green / orange	036-039
			Orange	040-043
			Orange / blue	044-047
			Blue	048-051
			Blue / turquoise	052-055
			Turquoise	056-059
			Turquoise / white	060-063
			White 2700 Kelvin	064-064
			White 2700 Kelvin, tungsten dimming	065-065
			White 3200 Kelvin	066-066
			White 3200 Kelvin, tungsten dimming	067-067
			White 4200 Kelvin	068-068
			White 5600 Kelvin	069-069
			White 6000 Kelvin	070-070
			White 6500 Kelvin	071-071
			White 7000 Kelvin	072-072
			White 8000 Kelvin	073-191
			Color change effect (fast - slow)	192-223
			Color change effect (fast - slow)	224-255

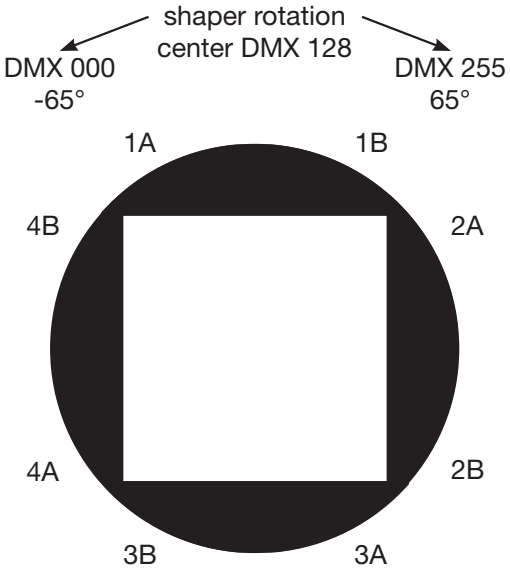

fixture standing with display to the front
Pan: center DMX 128
Tilt: lens looking backwards DMX 200

		71	**Virtual colors 1**	
			Open	000-000
			Filter 4 – Medium Bastard Amber	001-002
			Filter 10 – Medium Yellow	003-004
			Filter 19 – Fire	005-006
			Filter 26 – Bright Red	007-008
			Filter 58 – Lavender	009-010
			Filter 68 – Sky Blue	011-012
			Filter 71 – Tokyo Blue	013-014
			Filter 79 – Just Blue	015-016
			Filter 88 – Lime Green	017-018
			Filter 90 – Dark Yellow Green	019-020
			Filter 100 – Spring Yellow	021-022
			Filter 101 – Yellow	023-024
			Filter 102 – Light Amber	025-026
			Filter 103 – Straw	027-028
			Filter 104 – Deep Amber	029-030
			Filter 105 – Orange	031-032
			Filter 106 – Primary Red	033-034
			Filter 111 – Dark Pink	035-036
			Filter 115 – Peacock Blue	037-038
			Filter 116 – Medium Blue-Green	039-040
			Filter 117 – Steel Blue	041-042
			Filter 118 – Light Blue	043-044
			Filter 119 – Dark Blue	045-046
			Filter 120 – Deep Blue	047-048
			Filter 121 – Filter Green	049-050
			Filter 128 – Bright Pink	051-052
			Filter 131 – Marine Blue	053-054
			Filter 132 – Medium Blue	055-056
			Filter 134 – Golden Amber	057-058
			Filter 135 – Deep Golden Amber	059-060
			Filter 136 – Pale Lavender	061-062
			Filter 137 – Special Lavender	063-064
			Filter 138 – Pale Green	065-066
			Filter 139 – Primary Green	067-068
			Filter 141 – Bright Blue	069-070
			Filter 147 – Apricot	071-072
			Filter 148 – Bright Rose	073-074
			Filter 152 – Pale Gold	075-076
			Filter 154 – Pale Rose	077-078
			Filter 157 – Pink	079-080
			Filter 158 – Deep Orange	081-082
			Filter 162 – Bastard Amber	083-084
			Filter 164 – Flame Red	085-086
			Filter 165 – Daylight Blue	087-088
			Filter 169 – Lilac Tint	089-090
			Filter 170 – Deep Lavender	091-092
			Filter 172 – Lagoon Blue	093-094
			Filter 179 – Chrome Orange	095-096
			Filter 180 – Dark Lavender	097-098
			Filter 181 – Congo Blue	099-100
			Filter 197 – Alice Blue	101-102
			Filter 201 – Full C.T. Blue	103-104
			Filter 202 – Half C.T. Blue	105-106
			Filter 203 – Quarter C.T. Blue	107-108
			Filter 204 – Full C.T. Orange	109-110
			Filter 205 – Half C.T. Orange	111-112
			Filter 206 – Quarter C.T. Orange	113-114

Functions written in light grey are not available in current software!!

			Filter 247 – Full Minus Green	115-116
			Filter 248 – Half Minus Green	117-118
			Filter 281 – Three Quarter C.T. Blue	119-120
			Filter 285 – Three Quarter C.T. Orange	121-122
			Filter 352 – Glacier Blue	123-124
			Filter 353 – Lighter Blue	125-126
			Filter 715 – Cabana Blue	127-128
			Filter 778 – Millennium Gold	129-130
			Filter 793 – Vanity Fai	131-200
			User filter 1	201-201
			User filter 2	202-202
			User filter 3	203-203
			User filter 4	204-204
			User filter 5	205-205
			User filter 6	206-206
			User filter 7	207-207
			User filter 8	208-207
			User filter 9	209-209
			User filter 10	210-210
			Not used	211-255
			Virtual colors 2	
			Open	000-000
			Filter 4 – Medium Bastard Amber	001-002
			Filter 10 – Medium Yellow	003-004
			Filter 19 – Fire	005-006
			Filter 26 – Bright Red	007-008
			Filter 58 – Lavender	009-010
			Filter 68 – Sky Blue	011-012
			Filter 71 – Tokyo Blue	013-014
			Filter 79 – Just Blue	015-016
			Filter 88 – Lime Green	017-018
			Filter 90 – Dark Yellow Green	019-020
			Filter 100 – Spring Yellow	021-022
			Filter 101 – Yellow	023-024
			Filter 102 – Light Amber	025-026
			Filter 103 – Straw	027-028
			Filter 104 – Deep Amber	029-030
			Filter 105 – Orange	031-032
			Filter 106 – Primary Red	033-034
			Filter 111 – Dark Pink	035-036
			Filter 115 – Peacock Blue	037-038
			Filter 116 – Medium Blue-Green	039-040
			Filter 117 – Steel Blue	041-042
			Filter 118 – Light Blue	043-044
			Filter 119 – Dark Blue	045-046
			Filter 120 – Deep Blue	047-048
			Filter 121 – Filter Green	049-050
			Filter 128 – Bright Pink	051-052
			Filter 131 – Marine Blue	053-054
			Filter 132 – Medium Blue	055-056
			Filter 134 – Golden Amber	057-058
			Filter 135 – Deep Golden Amber	059-060
			Filter 136 – Pale Lavender	061-062
			Filter 137 – Special Lavender	063-064
			Filter 138 – Pale Green	065-066
			Filter 139 – Primary Green	067-068
			Filter 141 – Bright Blue	069-070
			Filter 147 – Apricot	071-072

Functions written in light grey are not available in current software!!

			Filter 148 – Bright Rose Filter 152 – Pale Gold Filter 154 – Pale Rose Filter 157 – Pink Filter 158 – Deep Orange Filter 162 – Bastard Amber Filter 164 – Flame Red Filter 165 – Daylight Blue Filter 169 – Lilac Tint Filter 170 – Deep Lavender Filter 172 – Lagoon Blue Filter 179 – Chrome Orange Filter 180 – Dark Lavender Filter 181 – Congo Blue Filter 197 – Alice Blue Filter 201 – Full C.T. Blue Filter 202 – Half C.T. Blue Filter 203 – Quarter C.T. Blue Filter 204 – Full C.T. Orange Filter 205 – Half C.T. Orange Filter 206 – Quarter C.T. Orange Filter 247 – Full Minus Green Filter 248 – Half Minus Green Filter 281 – Three Quarter C.T. Blue Filter 285 – Three Quarter C.T. Orange Filter 352 – Glacier Blue Filter 353 – Lighter Blue Filter 715 – Cabana Blue Filter 778 – Millennium Gold Filter 793 – Vanity Fai User filter 1 User filter 2 User filter 3 User filter 4 User filter 5 User filter 6 User filter 7 User filter 8 User filter 9 User filter 10 Not used	073-074 075-076 077-078 079-080 081-082 083-084 085-086 087-088 089-090 091-092 093-094 095-096 097-098 099-100 101-102 103-104 105-106 107-108 109-110 111-112 113-114 115-116 117-118 119-120 121-122 123-124 125-126 127-128 129-130 131-200 201-201 202-202 203-203 204-204 205-205 206-206 207-207 208-208 209-209 210-210 211-255
26	41	41	**Red** (8 Bit) 0-100%	000-255
	42	42	**Red fine** (16 Bit)	000-255
27	43	43	**Green** (8 Bit) 0-100%	000-255
	44	44	**Green fine** (16 Bit)	000-255
28	45	45	**Blue** (8 Bit) 0-100%	000-255
	46	46	**Blue fine** (16 Bit)	000-255
29	47	47	**Amber** (8 Bit) 0-100%	000-255
	48	48	**Amber fine** (16 Bit)	000-255

Functions written in light grey are not available in current software!!

30	49	49	**Lime** (8 Bit) 0-100%	000-255
	50	50	**Lime fine** (16 Bit)	000-255
31	51	51	**Colorfulness** (8 Bit) 0-100% (only available in COLORMIXMODE RGB)	000-255
	52	52	**Colorfulness** (16 Bit) (only available in COLORMIXMODE RGB)	000-255
32	53	53	**CTO** (8 Bit) 0-100%	000-255
	54	54	**CTO fine** (16 Bit)	000-255
33	55	55	**CTC** 2000 K - 13000 K / defaults: HP DMX068 / HC DMX058 / WW DMX032 Off 2000 K 2000 K - 13000K in 100K steps DMX 20 = 2000K, DMX 21=2100K 13000K	 000-000 001-020 020-130 131-255
34	56	56	**CRI select** CRI 70-95	 000-255
		73	**Virtual red** Minus red neutral Plus red	 000-127 128-128 129-255
		74	**Virtual green** Minus green neutral Plus green	 000-127 128-128 129-255
		75	**Virtual blue** Minus blue neutral Plus blue	 000-127 128-128 129-255
		76	**Virtual amber** Minus amber neutral Plus amber	 000-127 128-128 129-255
		77	**Virtual lime** Minus lime neutral Plus lime	 000-127 128-128 129-255
		78	**Crossfade** No crossfade RGBAL-color mixing only Crossfade RGBAL-color mixing to virtual colors 1 Virtual colors 1 Crossfade virtual colors 1 to virtual colors 2 Virtual colors 2	 000-000 001-001 002-126 127-128 129-254 255-255

Functions written in light grey are not available in current software!!

35	57	57	**Black body shift (tint)** Off Minus green (-1% -> -100%) Neutral white Plus green (+1% -> +100%)	 000-000 001-127 128-128 129-255
36	58	58	**Sparkle - Glitter effect** Sparkle effect inactive Sparkle effect intensity (minimum - maximum)	 000-000 001-255
37	59	59	**Sparkle speed** Faded sparkle effect (slow -> rapid) Switched sparkle effect (slow -> rapid) Repetition of the fading and switching blocks	 000-031 032-063 064-255
38	60	60	**Prism 1** Open Prism 1 (5-fold linear)	 000-007 008-255
39	61	61	**Prism 1 positioning/rotation** Prism positioning (0° - 540°) Prism rotation, right (rapid -> slow) Stop prism rotation Prism rotation, left (slow -> rapid)	 000-191 192-222 223-224 225-255
	62	62	**Prism 1 fine positioning/rotation** (16 Bit)	000-255
40	63	63	**Prism 2** Open Prism 2 (3-fold circular)	 000-007 008-255
41	64	64	**Prism 2 positioning/rotation** Prism positioning (0° - 540°) Prism rotation, right (rapid -> slow) Stop prism rotation Prism rotation, left (slow -> rapid)	 000-191 192-222 223-224 225-255
	65	65	**Prism 2 fine positioning/rotation** (16 Bit)	000-255
42	66	66	**Frost 1 "light frost"** Frost 0-100%	 000-255
43	67	67	**Frost 2 "heavy frost"** Frost 0-100%	 000-255
47	71	79	**Reserved**	000-255
44	68	68	**Pan/tilt speed** Real-time motion Delayed motion (rapid - slow)	 000-003 004-255
45	69	69	**Effects speed** Real-time effects Delayed effects (rapid - slow)	 000-003 004-255

Functions written in light grey are not available in current software!!

46	70	70	**Blackout Move**	
			Not assigned	000-095
			Blackout during pan/tilt	096-127
			Blackout during Gobo, Color, Prism, Colormix, Iris, Frost	128-159
			Blackout during Gobo, Color, Prism, Colormix, Iris, Frost, Zoom, Focus	160-191
			Blackout during Gobo, Color, Prism, Colormix, Iris, Frost, Pan/Tilt	192-223
			Blackout during Gobo, Color, Prism, Colormix, Iris, Frost, Zoom, Focus, Pan/Tilt	224-255

5.1.3 Control channel

Via the control channel different functions of the fixture can be permanently switched. The following functions can be switched via the control channel.
Response of the headlamp when dimming via faders
COLOR MIX POWER LIMIT - setting of total power consumption
CONSTANT COLOR MODE - adjusting color fidelity
CONSTANT BRIGHTNESS MODE - adjusting constabt brightness
CONSTANT BRIGHTNESS LIMIT - setting the limit for constant brightness control
BACKLIGHT MODE - display backlight
DISPLAY ORIENTATION - display orientation
MAIN SCREEN MODE - main screen view
USER FIXTURE ID SET - set headlight number
BLACK BODY SHIFT - adjustment +- green
DIMMER CURVE - dimmer curve adjustment
RGBAL CURVE - adjust the RGBAL curve
FROST CURVE - setting the frost curve
PAN / TILT SPEED - pan / tilt speed
EFFECT SPEED - effect speed
COOLING MODE - adjust the fan volume and brightness
COLOR TEMP MODE - color temperature adjustment
BL MODE - type of shutter control
COLOR MIX MODE - Setting the color mix RGBW - RGBALW
FAN MODE - setting the basic volume in the selected COOLING MODE
CAMERA MODE - sets the LED refresh rate
RESET - a basic reset of the headlight is performed

For details, see DMX Channel functions for the M15 Profile Profile on page 34.

5.1.4 Sparkle effect, sparkle speed

Animation effects can be created via this channel in connection with the focus. Depending on the intensity, the projection can be made to shake more or less. This effect can be dimmed or switched.

5.1.5 Auto focus

To activate the autofocus function, set the autofocus distance channel to around 50%. Then best use gobo wheel 2 for fine adjustment of the system and set the focus accordingly to 125 (32000): Then set the distance to the headlight by focusing the headlight using the autofocus distance. As a guideline, DMX value divided by 10 corresponds to the distance (DMX 100/10 distance = 10m). Now the headlight can be operated with autofocus via the zoom. Using the following table, the focus values for the individual effects can now be preselected and zoomed in with autofocus.

Functions written in light grey are not available in current software!!

	Gobo1	Gobo2	Open	Shaper	Iris
Focus 8Bit	95	125	185	195	215
Focus 16Bit	24320	32000	47360	49920	55040

5.2 Artnet

The spotlight can be controlled via Artnet - ArtNET 4. To do this, set the Artnet address via the menu item DMX / NET ADDR -> ARTNET ADDRESS and also select it via the menu item PERSONALITY -> DMX INPUT CONFIG -> NETWORK -> MODE -> ARTNET. In addition, define the IP address of the spotlight via PERSONALITY -> DMX INPUT CONFIG -> NETWORK -> IP ADDRESS.

5.3 Streaming ACN

The headlight can be controlled via sACN - Streaming ACN. To do this, set the sACN address via the menu item DMX / NET ADDR -> SACN ADDRESS and also select it via the menu item PERSONALITY -> DMX INPUT CONFIG -> NETWORK -> MODE -> SACN. In addition, define the IP address of the spotlight via PERSONALITY -> DMX INPUT CONFIG -> NETWORK -> IP ADDRESS.

5.4 Wireless-DMX

The M15 Profile is equipped with a Lumen Radio CRMX receiver for wireless DMX. The receiver can process both DMX and RDM. If there is a cable and wireless connection to the M15 Profile, the cable connection has priority! The received signal can be output via the DMX connection. To do this, set the DMX OUTPUT CONFIG setting to ON in the PERSONALITY menu. After confirming with ENTER, the spotlight will output the entire universe received via wireless DMX.

5.5 RDM

The M15 Profile can communicate via RDM (Remote Device Management) in accordance with ESTA American National Standard E1.20-2006. RDM is a bidirectional communication protocol for use in DMX512 control systems. It is the open standard for the configuration and status monitoring of DMX-512 devices. The RDM protocol enables data packets to be inserted into a DMX-512 data stream without affecting existing non-RDM devices. It enables a console or dedicated RDM controller to send commands to specific devices and receive messages. The M15 Profile can send and receive RDM via DMX and Artnet 4. The spotlight is also designed to send RDM via sACN and receive it via Artnet. The RDM functionality depends on the lighting control desk used, the operating instructions of the respective desk manufacturer must also be observed.

5.5.1 RDM-UID

Every M15 Profile has a factory-set RDM-UID (unique identification number), which makes it addressable and identifiable in RDM systems.

5.5.2 RDM-PIDs

The M15 Profile supports the RDM PIDs (parameter IDs) required by ESTA as well as manufacturer-specific PIDs.

Functions written in light grey are not available in current software!!

5.5.3 Standard RDM parameter IDs

RDM parameter ID	GET	SET	DISCO-VERY	Note
RDM identification				
DISC_UNIQUE_BRANCH			✔	is used for fixture identification
DISC_MUTE			✔	is used for fixture identification
DISC_UN_MUTE			✔	is used for fixture identification
RDM status determination				
QUEUED_MESSAGE	✔			
STATUS_MESSAGES	✔			
STATUS_ID_DESCRIPTION	✔			
CLEAR_STATUS_ID		✔		
RDM information				
SUPPORTED_PARAMETERS	✔			
RDM configuration				
DEVICE_MODEL_DESCRIPTION	✔			
MANUFACTURER_LABEL	✔			
FACTORY_DEFAULTS		✔		
SOFTWARE_VERSION_LABEL	✔			
DMX_PERSONALITY		✔		
DMX_PERSONALITY_DESCRIPTION	✔			
DMX_START_ADDRESS		✔		
SENSOR_DEFINITION	✔			
DEVICE_HOURS	✔			
LAMP_HOURS	✔			
IDENTIFY_DEVICE		✔		
RESET_DEVICE		✔		
PERFORM_SELFTEST		✔		
SELFTEST_DESCRIPTION	✔			

5.5.4 Manufacturer specific RDM parameter IDs

RDM parameter ID	GET	SET	DISCO-VERY	Note
RDM configuration				
Battery Charge Hours	✔			
Error Number	✔			
Error	✔			
Select Next Error		✔		
Remove Error		✔		
Remove New Error Flag		✔		
User Defaults		✔		
User Fixture ID		✔		
Fixture Lock On/Off	✔	✔		
Dimmer Curve	✔	✔		
RGBAL Curve	✔	✔		
Frost Curve	✔	✔		

Functions written in light grey are not available in current software!!

Camera Mode	✔	✔		
Cooling Mode	✔	✔		
Pan Tilt Speed	✔	✔		
Effect Speed	✔	✔		
Backlight Mode	✔	✔		
Disp Orientation	✔	✔		
Main Screen Mode	✔	✔		
Safe Mode Switch	✔	✔		
Color Mix Power Limit	✔	✔		
Color Temperature Mode	✔	✔		
Constant Brightnes Limit	✔	✔		
Constant Brightness Mode	✔	✔		
Constant Color Mode	✔	✔		
Fan Mode	✔	✔		
Black Body Shift	✔	✔		
Color Mix Mode	✔	✔		
Blade Mode	✔	✔		

5.5.5 RDM sensor IDs

RDM sensor ID	GET	SET	DISCO-VERY	Note
RDM sensors				
Temp Sens Base LCD	✔	✔		
Temp Sens Base PS	✔	✔		
Temp Sens Head PCB	✔	✔		
Temp Sens Head Drv	✔	✔		
Temp Sens Head LED	✔	✔		
Temp Sens Head Air	✔	✔		

6. JB-Lighting user network

Do you want to rent out your JB-Lighting products or rent additional ones?
Then join our User Network! Become part of our JB Community!
Other members can easily filter by location or postal code, distance, and the JB product they need – allowing them to rent your offered moving heads. Let's go!

Here you can find our user network:
https://www.jb-lighting.de/JBUserNetwork?utm_source=handbuch&utm_medium=print&utm_campaign=qr_code_handbuch

Functions written in light grey are not available in current software!!

JB-Lighting Lichtanlagentechnik GmbH
Sallersteig 15
89134 Blaustein
Tel. +49 7304 9617-0
Fax. +49 7304 9617-99
info@jb-lighting.de
www.jb-lighting.de

JB LIGHTING